COUGAR DARTS

EC-A-AA-ENG

INSTALLATION AND OPERATION MANUAL

COPYRIGHT 1989,1990,1991,1992,1993
ALL RIGHTS RESERVED
VALLEY RECREATION PRODUCTS INC.
333 MORTON STREET
BAY CITY, MICHIGAN 48707 U.S.A.
P.O. BOX 656 PHONE: 517 892-4536

TABLE OF CONTENTS
ESM03

PAGE

Warranty
Notice

Cougar SM Dart Game

Game Specifications and Installation 1
Stability Assurance Kit 3
Game Features 6
Tru-Score II 7
Infrared Sensor 8
Dip Switches Information 9
Dip Switch Settings 10
General Playing Instructions 15
Playing Instructions for Each Game 16
301/501 and Cricket Feats Readout 20
Bookkeeping 23
Self-Checking Software 29
Diagnostic Routines 31
Infrared Sensor Adjustment Procedure 33
Dart Sensor Adjustment Procedure 33
General Maintenance 34
Troubleshooting 35

Parts lists and Drawings

Light Hood and Upper Display 43
Electronics Compartment. 44
Stationary Matrix Target Assembly 45
Replacement Lamps 46
Push Button Switches 47
System Diagram 48
Cables and Harnesses 49

Schematics and Diagrams

Controller 50
Upper Display 51
Regulator Shroud 52
Power Supply, High Voltage 53
Power Supply, Low Voltage 54
Infrared Sensor 55
Matrix Interconnect 56

VALLEY RECREATION PRODUCTS, INC.
P/N 219-0156-7

LIMITED WARRANTY

This product is warranted against manufacturer defects or failure of electronic components for a period of one (1) full year. Valley Recreation Products, Inc. will repair or replace any component, assembly or subassembly that fails during normal operation, free of charge, for a period of one (1) year. Any modification unauthorized by Valley Recreation Products, Inc. made to any part of this product will void all existing warranties. This warranty does not apply to damage resulting from misuse, abuse, neglect, improper installation or maintenance.

The foregoing warranty is exclusive and in lieu of all other warranties of merchantability, fitness for purpose and of any other type, whether expressed or implied. Valley Recreation Products, Inc. neither assumes nor authorizes anyone to assume for it any other obligation or liability in connection with said product and will not be liable for consequential damages.

Warranty service is available through your distributor.

SERVICE PHONE NUMBER:	**1-800-331-5420**
SERVICE FAX NUMBER:	**1-815-895-2118**

Please fill in the appropriate information for easy reference.

SERIAL NUMBER: _____

(Found on the upper right side of the lower cabinet near the hinge)

NOTICE

This equipment has been tested and found to comply with the limits for a Class A digital device, pursuant to Part 15 of the FCC Rules. These limits are designed to provide reasonable protection against harmful interference when the equipment is operated in a commercial environment.
This equipment generates, uses and can radiate radio frequency energy and, if not installed and used in accordance with the instruction manual, may cause harmful interference to radio communications. Operation of this equipment in a residential area is likely to cause harmful interference in which case the user will be required to correct the interference at his own expense.

Changes or modifications not expressly approved by VALLEY RECREATION PRODUCTS, INC. for compliance could void the user's authority to operate the equipment.

This digital apparatus does not exceed the Class A limits for radio noise emissions from digital apparatus set out in the radio interference regulations of the Canadian Department of Communications.

Le présent appareil numérique n'émet pas de bruits radioélectriques dépassant les limites applicables aux appareils numériques de la Classe A prescrites dans le règlement sur le brouillage radioélectrique édicté par le ministère des Communications du Canada.

* *

To ensure safety, modification to any part of this game is prohibited.

* *

The keys to this game should not under any circumstances be left in the locks or be accessible in any way to unauthorized service personnel.

* *

This TECHNICAL MANUAL is subject to change. Supplement will be available upon request.

GAME SPECIFICATIONS AND INSTALLATION

COUGAR SM DART GAME

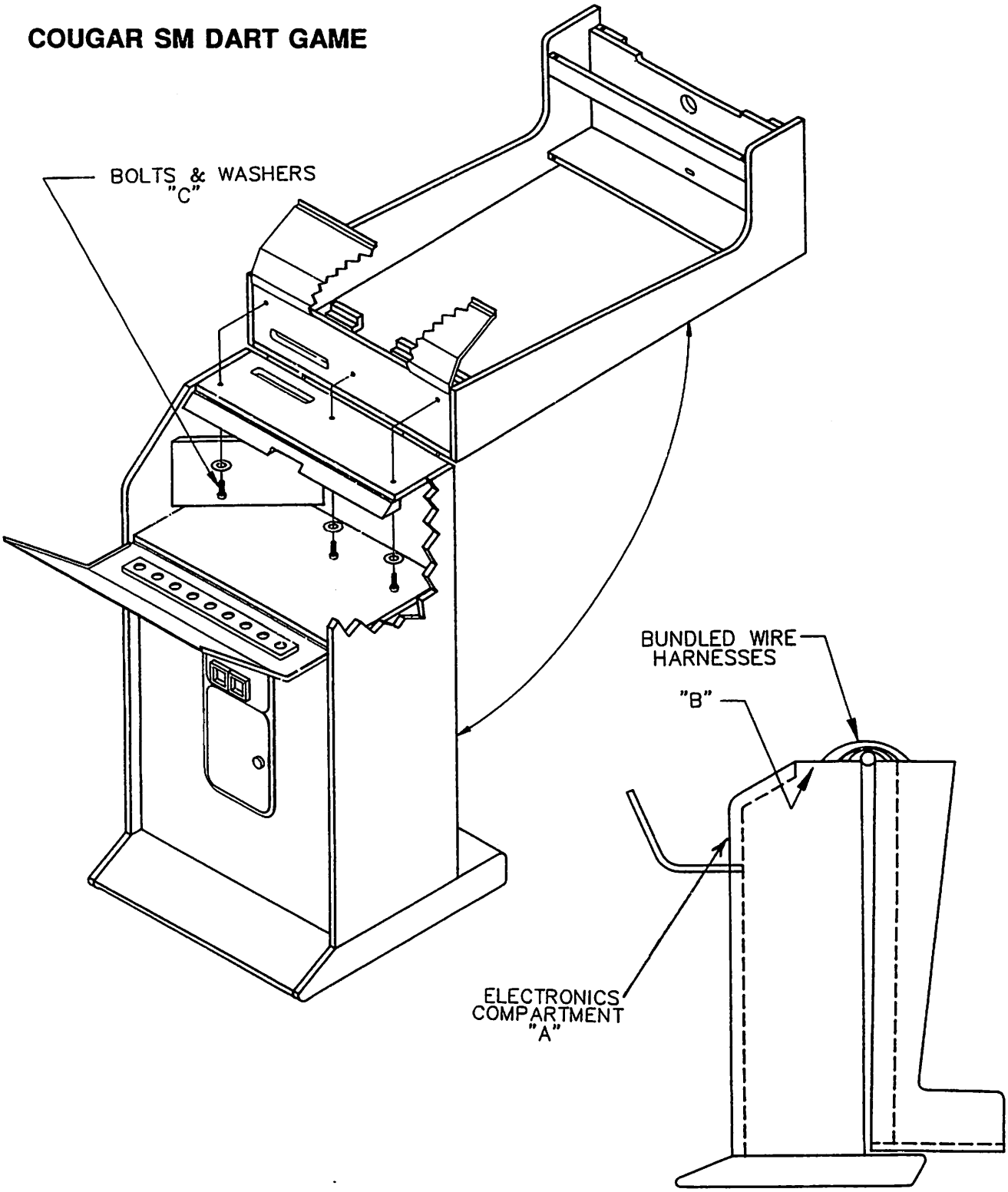

GAME IN SHIPPED POSITION

GAME SPECIFICATIONS AND INSTALLATION

Specifications:

THIS GAME IS SUITABLE FOR INDOOR USE ONLY.

Height: 86" upright **Width: 24"**
Weight: 203 lbs **Voltage: 120 Volts**

Installation:

NOTE: **To install this game, a working area of approximately 6' x 4' with a 90" ceiling clearance is needed. A rachet with a 1/2" socket is recommended to secure the bolts to surface "B".**

1. Unlock and open swing down door "A" to access the electronics compartment.

2. Remove the washers and bolts "C" from the plastic bag stapled inside the electronics compartment and set them aside within easy reach.

3. Slowly and carefully swing the upper section of the game upright **bracing the back until the game is securely fastened** (step 4).

4. Verify that the wires are not pinched. Replace the washers and bolts "C" in the inside top "B" of the electronics compartment and thread upward to secure the upper section of the game. **Tighten the bolts.**

5. This game is equipped with an easily replaceable power/line cord. The cord is located inside the pedestal when shipped and must be routed through the opening at the back of the game prior to operation. To do this, follow the instructions below, refering to the illustrations on page 2. Review FIG. 1 on page 2 before proceeding.

   A. Open coin door.
   B. Turn power cord cover latch counterclockwise until the power cord hole cover itself can be rotated counterclockwise. See FIG. 2.
   C. Turn power cord hole cover to expose opening. See FIG. 3.
   D. Locate power cord (inside pedestal, and route plug end through opening. Push the entire length of the cord through the opening.
   E. Return power cord hole cover to its original position making sure cord is inserted through slot in cover. Be sure power cord cover latch falls back into position.

NOTE: If the cabinet top must be folded down for any reason, the power cord must be placed back inside the pedestal.

6. Move the game to its selected location without tilting it more than 10°. Plug power cord into an appropriate outlet.

CAUTION

To ensure safety, it is recommended that the game be secured to the floor or to the wall with the Stability Assurance Kit provided according to the instructions on the following pages.

LINE CORD ROUTING INSTRUCTIONS
FIGURES 1-3

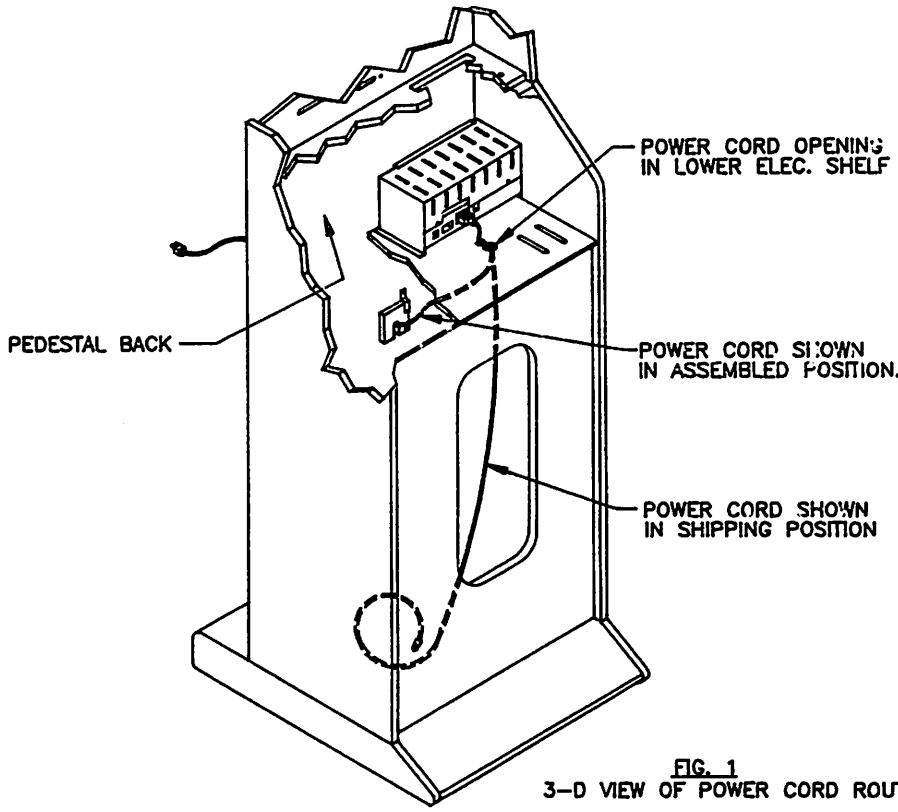

FIG. 1
3-D VIEW OF POWER CORD ROUTING

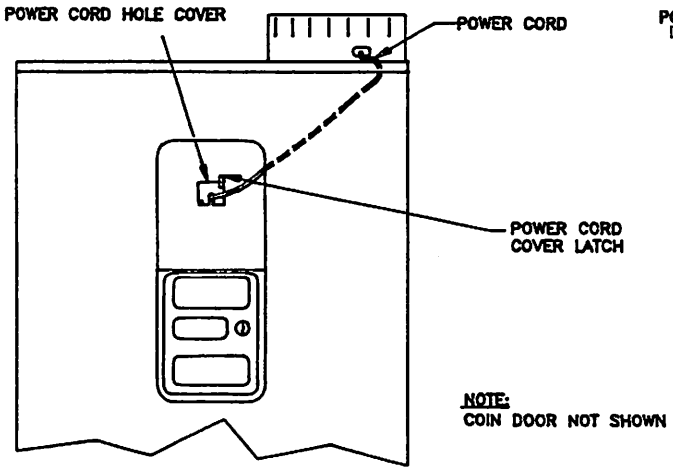

FIG. 2
FRONT VIEW OF POWER CORD COVER IN CLOSED POSITION

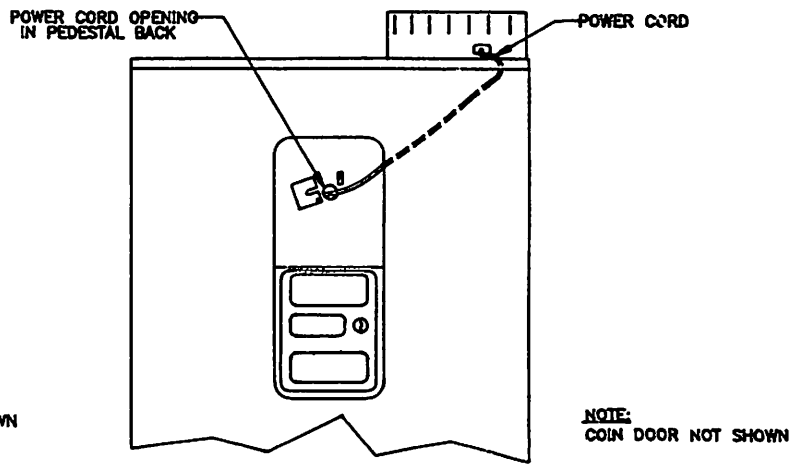

FIG. 3
FRONT VIEW OF POWER CORD COVER IN OPEN POSITION

GAME SPECIFICATIONS AND INSTALLATION

STABILITY ASSURANCE KIT

PARTS LIST

D

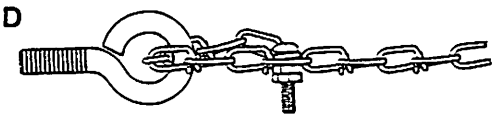

Eye bolt and chain fastened with hex nut and screw

E

Machine Screw #8-32x3/4"

F

Hex Nut #8-32

G

Flat Washer #10

H

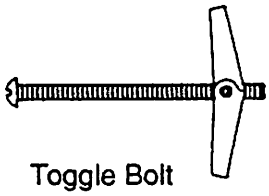

Toggle Bolt 3/16x3"

J

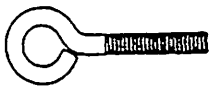

Wire Eye Bolt

K

Wall Anchor Expansion Shield 1/4x1-1/4"

L

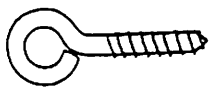

Wood Eye Bolt

M

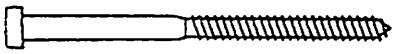

Lag Bolt, Hex 5/16 x 4.5"

N

Flat Washer 11/32' I.D. 11/16" O.D.

P

Floor Anchor 5/16x1-3/4"

R

Fender Washer

INSTALLATION INSTRUCTIONS

TOOLS NEEDED:
- Measuring tape
- Small screwdriver (Phillips and Flathead)
- Pliers or crescent wrench
- Drill with:
  a 1/2" bit to secure the game to a hollow wall
  a 1/2" masonry bit to secure the game to a concrete, brick, or stone wall.

ATTACHMENT OF THE CHAIN TO THE WALL:

Step 1: Fasten eye bolt and chain to the game.

- Screw the eye bolt with chain (D) into the insert on the upper back wall of the game.

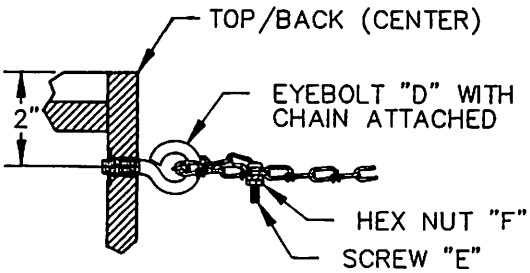

GAME SPECIFICATIONS AND INSTALLATION

STABILITY ASSURANCE KIT

Step 2: Fasten to the wall according to the following instructions A, B, or C.

A. Hollow wall - plaster, drywall, etc.

1. With the game in the position where it will be played, mark a spot on the wall directly in line with the eye bolt and chain attachment on the back of the game.
2. Drill a 1/2" diameter hole at the marked spot.

3. Unscrew the wings from the toggle bolt (H).
4. Place a fender washer (R) on the toggle bolt.
5. Place the toggle bolt (H) through a loop in the chain a few inches from the end of the chain. The toggle bolt (H) may have to be threaded through the loop in the chain.
6. Slide a fender washer (R) on the toggle bolt (H) and screw the wings back on.

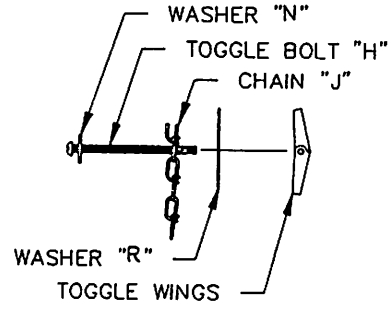

7. Push the toggle bolt (H) into the drilled hole in the wall.
8. Fasten the toggle bolt (H) tightly until the wings are snug against the back of the wall as shown. Keep the chain as taut as possible to minimize slack.

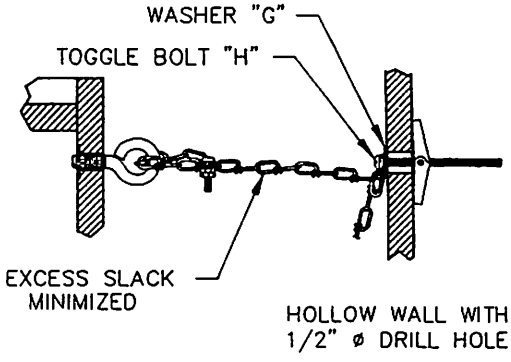

B. Concrete, brick, stone wall

1. With the game in the position where it will be played, mark a spot on the wall directly in line with the eye bolt and chain attachment on the back of the game.
2. Drill a 1/2" diameter hole, 1-1/4" deep at the marked spot.

3. Pound the wall anchor (K) into the hole until it is flush with the wall surface.
4. Screw the eye bolt (J) into the wall anchor (K) until it is tight.

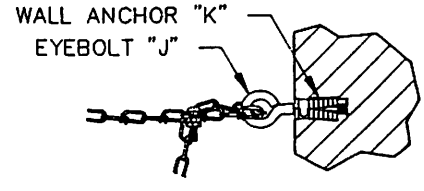

5. Thread the chain through the eye bolt and attach it to itself with the screw (E) and the two hex nuts (F) as shown. Keep the chain as taut as possible to minimize slack.

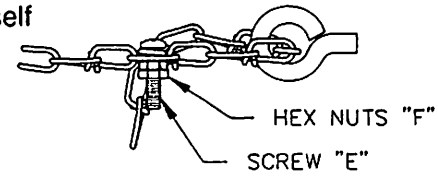

GAME SPECIFICATIONS AND INSTALLATION

STABILITY ASSURANCE KIT

C. Wood stud mounting

1. With the game in the position where it will be played, mark a spot on the wall directly in line with the eye bolt and chain attachment on the back of the game.

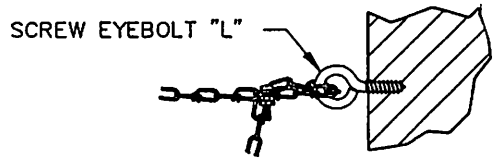

2. Screw the eye bolt into the stud at the marked spot.

3. Thread the chain through the eye bolt and attach it to itself with the screw (E) and the two hex nuts (F) as shown. Keep the chain as taut as possible to minimize slack.

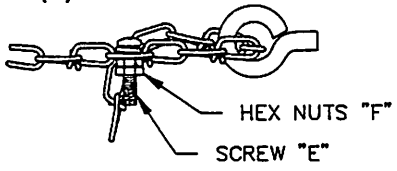

ATTACHMENT TO THE FLOOR:

Fasten to the floor according to the following instructions A or B.

Concrete floor

1. Mark three spots on the floor according to the diagram.
2. Drill the three holes at the marked spots 1/2" diameter X 1-3/4" deep each.
3. Pound in the floor anchors (P).

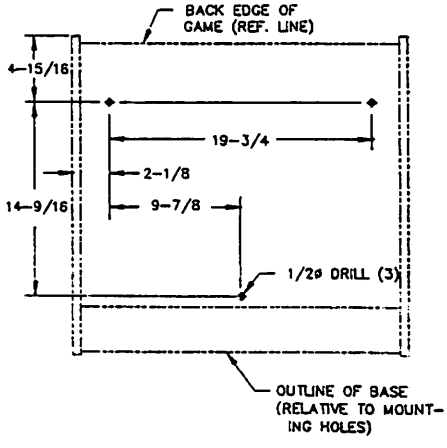

4. Align the holes in the base of the game with the floor anchors (P).
5. Secure the game with the flat washers (N) and lag bolts (M).
6 Tighten the lag bolts until flush with the bottom of the counterbored holes in the base.

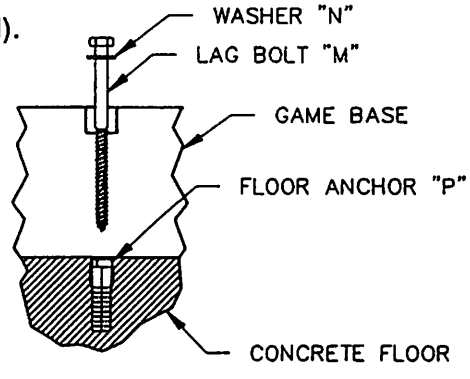

Wood floor

1. Position the game in its selected location.
2. Secure the game with the washers (N) and lag bolts (M).
   NOTE: If desired, a 1/8" diameter pilot hole maybe used to start the lag bolt.
3. Tighten the lag bolts (M) until flush with the bottom of the counterbored holes in the base.

GAME FEATURES

A. **Tru-Score** - Software system for correctly scoring darts.

B. **Tru-Score II** - Detection of darts that miss scoring sectors of the target. This is indicated by a short tone.

C. **Infrared Sensor** - Detection of player's removal of darts from the target and the automatic change to the next player.

D. **Dart Catching Ring**

E. **Dip Switch Selectable Features**

- Accumulative/Non Accumulative Mode
- FREE PLAY Mode **(NEW)**
- Attract-Sounds Disablement
- Skip Frozen Player in Team Cricket **(NEW)**
- One-Dart-Out Calculator
- Power Failure Recovery
- Player Change Speed Up

F. **Diddle Time** - Time allowed to practice or to establish position. (See the General Playing Instructions section in this manual.)

G. **Eight Games** - High Score, Shanghai, 301, 501, 701, **(NEW)** 901,**(NEW)** Cricket, Mark 21 Cricket **(NEW)**

Five Options for 301/501/701/901-
Double In, Double Out, Double In/Double Out, Masters Out and League.

Two Options for Cricket - Cut Throat, League

H. **Honest Ernie** - It is possible for Ernie (the computer) to be an opponent. Ernie has 5 skill levels. He can play any game against 1-3 opponents.

J. **League Play** - Permits 301, 501, 701, 901, Cricket or Cut-Throat team play.

K. **Handicap Round Features for 301/501/701/901 Play**

L. **301/501/701/901 and Cricket Feats Readout**

M. **Dormant Time Out** - Game will automatically reset after 30 minutes if no dart has been thrown.

N. **Bookkeeping** - Allows the operator to set the price for each game and to keep record of games played and credits entered.

O. **Price Preview in Attract Mode**

P. **Programmable Bullseye for each Game** **(NEW)**

Q. **Programmable Round Limits for each Game** **(NEW)**

TRU-SCORE II

Your Valley Dart Game is equipped with an impact sensor to detect darts which bounce off the door or hit the dart catching ring; the darts which do not hit the scoring area of the target are indicated by a short tone.
By sensing all the darts which have been thrown, the game will alert the player to remove the darts.
This feature is engaged or disengaged (locked out) using JU1 on the Controller Board.
This feature is factory adjusted and ready to use. If further adjustments are necessary, refer to the Dart Sensor Adjustment Procedure in this manual.

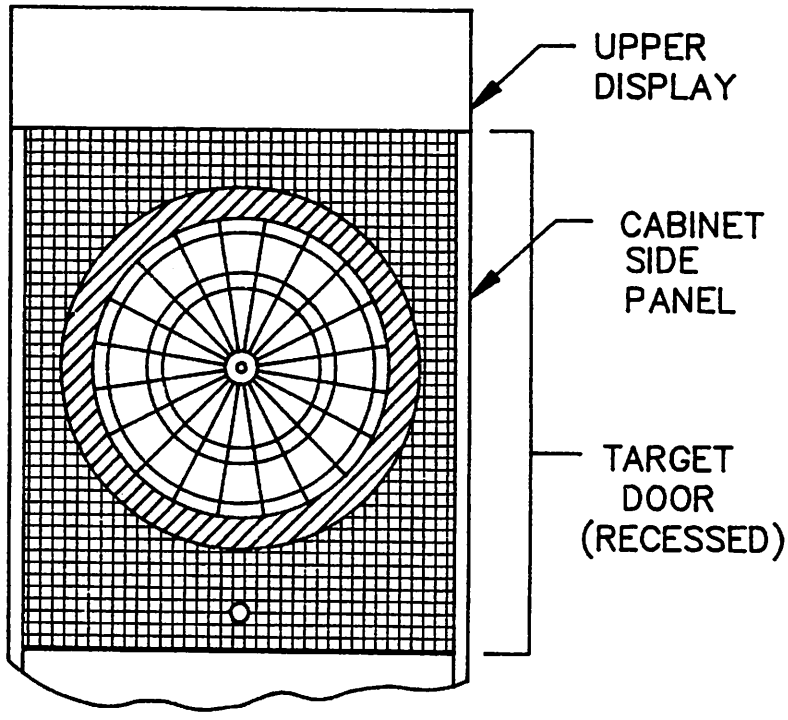

MISSED DART SENSING AREAS

DART CATCHING RING

TARGET DOOR SURFACE

INFRARED SENSOR

Your Valley Dart Game is equipped with an infrared sensor to detect a player removing darts at the end of his turn.
The infrared sensor is activated after 3 darts have scored or hit the door and have been detected by the Tru-Score II Impact Sensor. The player does not need to push the Player Change button as the game will sense the player removing the darts. The "Don't Throw Dart" lamp will light when the player is detected by the infrared sensor. After a few seconds, the game will automatically indicate the next player's turn and the "Throw Dart" lamp will light.
However, if all darts have not been counted, such as when a dart misses the game completely or when Tru-Score II is disengaged, the Infrared Body Sensor will not activate and it will be necessary to press the Player Change Button.
To adjust the infrared sensor sensivity refer to the Infrared Sensor Adjustment Procedure in this manual.

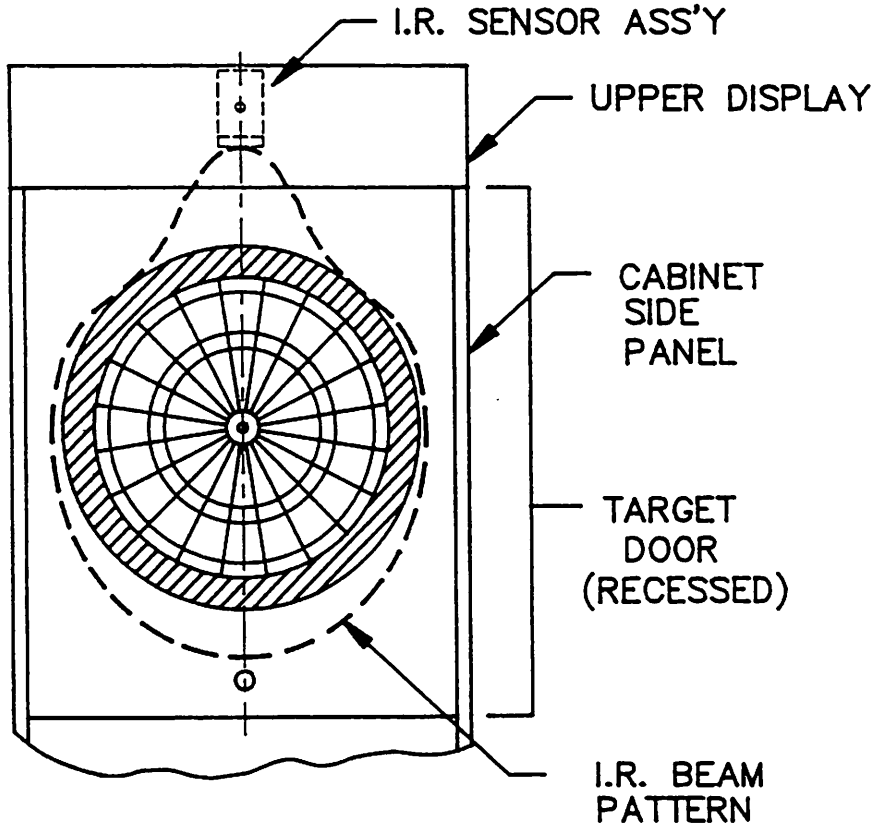

INFRARED DETECTION AREA

DIP SWITCHES

TOP

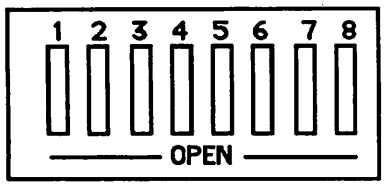

ROCKER

TOP

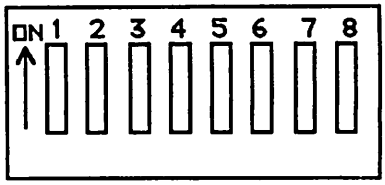

SLIDE

Dip Switches allow the operator to choose mode selection and option selection. The dip switch packages (SW1, SW2, SW3) are located on the Controller board.

Presently there are two types of DIP switches found in our games (SEE ABOVE). The switch is "open" when the SLIDE bar is opposite from "ON" or when the ROCKER is depressed toward the bottom of the switch.

LEGEND FOR PAGES 10 - 14 DIP SWITCH SETTINGS

ROCKER DIP SWITCH
SIDE VIEW

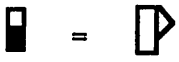

ROCKER POSITION
(WHERE DEPRESSED)
IS REPRESENTED BY
SHADED AREA

SLIDE DIP SWITCH
SIDE VIEW

ACTUAL POSITION
OF SLIDE STYLE DIP SWITCH
IS REPRESENTED BY
SHADED AREA

DIP SWITCH SETTINGS

(FACTORY SETTINGS INDICATED)

SW1

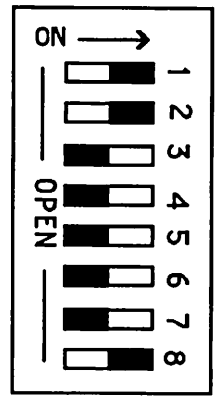

DOES NOT ACCUMULATE CREDIT	ACCUMULATES CREDIT
ONE-DART-OUT CALCULATOR ACTIVE	ONE-DART-OUT CALCULATOR INACTIVE
ATTRACT-SOUNDS ENABLED	ATTRACT-SOUNDS DISABLED
DART ALARM	NO DART ALARM
POWER FAILURE RECOVERY	NO POWER FAILURE RECOVERY
COUNTS EVERY DART	COUNTS 3 DARTS PER ROUND
STARTING POSITION CANNOT BE CHANGED	GAME STARTING POSITION OPTION
IR SENSOR DISENGAGED	IR SENSOR ENGAGED

SWITCH POSITION

1 CLOSED — **Allows the selection of accumulative/non-accumulative mode.**
Allows the game to accumulate credit.

OPEN — Does not allow the game to accumulate credit.
NOTE: In the Non-accumulative mode, adding coins while game is in progress will reset the game.

2 CLOSED — **One-Dart-Out Calculator.**
No single-dart-out segment calculation is displayed.

OPEN — Displays the segment(s) to hit in order to win in 1 dart.

3 CLOSED — **Attract-sounds disablement.**
Tones are disabled during attract mode.

OPEN — Tones are enabled during attract mode.

DIP SWITCH SETTINGS

SW1

4
CLOSED

Warning if the game is used before money is deposited.
No alarm whistle and the overhead lamp remains on.

OPEN

Causes alarm whistle to sound and overhead lamp to go off when target is struck. Overhead lamp remains off for 1 minute after last dart is thrown.

5
CLOSED

Power Failure Recovery.
Does not allow the game to resume after an interruption in power.

OPEN

Allows the game to resume after an interruption in power.

6
CLOSED

Allows the game to calculate the number of darts thrown.
Automatically counts 3 darts per round except in handicap and winning rounds.

OPEN

Counts only each dart which hits the target or is registered by the dart sensor.

7
CLOSED

Option in the method of starting a game using the Player Change Button.
The Player Change button can be used to start a game at a position other than one after the Remove Darts Time is over (5 seconds). (Ex. If player 1 missed the target, the game can start with player 2.)

OPEN

The Player Change button can only be used to change the number of players in the SELECT mode until the first dart scores.

8
CLOSED

Infrared Sensor feature.
Infrared Sensor engaged.

OPEN

Infrared Sensor disengaged.

DIP SWITCH SETTINGS
SW2

BULLSEYE OPTION NOT ENGAGED

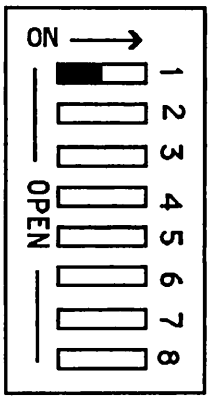

BULLSEYE OPTION ENGAGED

SWITCH POSITION

1 CLOSED

Bullseye Start/Finish for Double-In, Double Out or Masters Out
May start or finish double in, double out or Masters Out game on a single (50 point only) bullseye.

OPEN

Cannot start or finish a Double In, Double Out or Masters Out game on a single (50 point only) bullseye. If a player tries to win with a Single Bullseye, he will "bust".

2 CLOSED

OPEN

NOT USED

3 CLOSED

OPEN

NOT USED

DIP SWITCH SETTINGS

SW2

4
CLOSED NOT USED

OPEN

5 NOT USED
CLOSED

OPEN

6 NOT USED

CLOSED

OPEN

7
CLOSED NOT USED

OPEN

8 NOT USED
CLOSED

OPEN

DIP SWITCH SETTINGS

SW3

TEAM LOSES WHEN PLAYER "FROZEN"
NORMAL TIME
NO FREE PLAY
NO SKIP

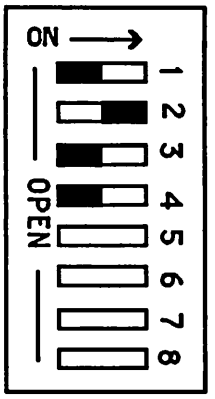

PLAYER BUSTS WHEN "FROZEN"
SPEED UP TIME
FREE PLAY
SKIP ENABLED

1
CLOSED

Option for "frozen" Player reaching zero during League.
Player will bust if "frozen" and reaches "0" during League, but the game will continue.

OPEN The team loses the game when one of its players is "frozen" and reaches "0" during League. The game will end.

2
CLOSED

Option for shortened delay time between players.
Time between players set at 2 seconds after a player leaves the IR beam.

OPEN Time between players set at 3 seconds after a player leaves the IR beam.

3
CLOSED

Free Play Mode
All game are free. Signified by FP in temporary score.

OPEN Normal Mode - To return to Normal Mode, move switch to OPEN <u>and</u> press 'Reset' (SW5) after returning from free play.

4
CLOSED

Skip Frozen Player in Team Cricket
Skip enabled.

OPEN Skip not enabled.

GENERAL PLAYING INSTRUCTIONS

1. Insert at least one coin. Select a game by pushing one of the flashing selection buttons. At this time, price per player will be displayed. The number of coins entered will be displayed in "TEMPORARY SCORE". Deposit the correct number of coins for each player.

   DIDDLE TIME

   After coining up and selecting a game, but before pushing the PLAYER CHANGE Button, there will be two minutes for players to "diddle" for position without setting off the "DART ALARM".

2. Press the "PLAYER CHANGE" button for the desired number of players if in the accumulative mode. In the non-accumulative mode the number of players is determined by the amount of credits; press the "PLAYER CHANGE" button once to display the players' scores.

3. Wait for the green "THROW DARTS" lamp to light(about 5 seconds) before starting play. A dart thrown before "THROW DARTS" is lit will not receive a score.

   To start the game:

   - Throw the first dart, or
   - Press the "LEAGUE" button to enter the Handicap Round (301/501/701/901 only), or
   - Select a different game (the game selection can be changed by pressing the button of the desired game and then the "PLAYER CHANGE" button, or

   if SW1 position 7 is closed:

   - Press the "PLAYER CHANGE" button to start the game at a position other than Player 1.

4. Each player throws 3 darts per round from the throw-line, 8' from the Shoot Darts Label on the base of the game.

5. After 3 darts have been thrown the player can remove the darts. If the Infrared Sensor feature is **engaged**, the game will display "REMOVE DARTS" until the player moves away from the game and then the game will automatically change players.

   NOTE: If the 3 darts have not been registered the player **must** press "PLAYER CHANGE" before removing darts.

PLAYING INSTRUCTIONS FOR EACH GAME

HIGH SCORE

- Each player throws 3 darts per round.
- Highest score at the end of the game wins.

SHANGHAI

- Player(s) begin by throwing 3 darts per turn.
- The object is to hit each sector with one dart in sequence beginning with sector #1 and working up to sector #20, and ending with the bullseye. The player with the highest score after 7 rounds or a "Shanghai" score wins the game.
- Game will prompt player for next sector at beginning of each round except 1st round, first play.
- A "Shanghai" is an automatic win achieved by throwing 3 consecutive scoring darts consisting of a single, a double and a triple sector in any order.
  [Ex. Player is shooting for 4, 5, 6 in round 4 of game.
  Player hits the triple 4 sector, then single 5 sector, and double 6 sector: that qualifies as a "Shanghai".]

301

- Beginning with a score of 301, player(s) must score down to exactly "0". First player to reach "0" wins.
- Any points scored exceeding the point total needed to reach "0" for a win will result in a "Bust". Player loses turn and forfeits any remaining darts not thrown. Player's score will return to the score at the beginning of the round.

501-701-901

- Same game as "301" except that the starting score is 501, 701 or 901 points. To select above '01 games, press the 301/501/701/901 Button repeatedly until the desired game is displayed in the temporary score.

PLAYING INSTRUCTIONS FOR EACH GAME

301/501/701/901 OPTIONS

Double In:

- Each player must hit a double point value segment or an inner Bullseye to begin game play. Player's score will remain at 301,501,701 or 901 until then.
  Note: Darts thrown prior to the first scoring throw will not receive credit.

Double Out:

- A player must reach "0" exactly by scoring a double point value segment or an inner Bullseye. (A score of "1" will automatically bust player in this game.)

Double In/Double Out:

- This is a combination of the Double In game and the Double-Out game mentioned above.

Masters Out:

- This is played the same as Double Out, but the player can also go out by hitting a triple point value segment or a Bullseye.

League

- Can only be chosen when there are enough credits to start a four player 301/501/701/901 game.
- Players 1 and 3 are Team "A". Players 2 and 4 are Team "B".
- The objective is for one player on a team to reach "0" .
- The score of the other player on the team must be less than or equal to the combined score of the opposing team's players. A player may not be able to win the game if his partner's score is greater than the opposing team's **combined** score; this situation causes that player to be "frozen", i.e., if the partner's score is 50 and the opposing team players have 15 and 10 totalling 25 points.
- If a player is "frozen" and reaches "0", the game will cause this player to bust when DIP Switch SW3, position 1 is closed, or the game will cause the team to lose when DIP Switch SW3, position 1 is open.

CRICKET

- Played using segments 20, 19, 18, 17, 16, 15 and the Bullseye.
  The objective is to close a numbered segment by hitting it the equivalent of three times. A player can close a numbered segment by throwing 3 darts or the equivalent of 3 darts into that particular segment.
  [Ex. Before scoring can begin in #20, the player must throw 3 darts in the single, or 1 dart in the single and 1 dart in the double, or 1 dart in the triple #20.]
- The player who closes a number may score on that number until it is closed by all other players.
- The game ends when one player has closed out all segments from #20 through Bullseye and has the highest score, or tied for it.

25 Rounds

PLAYING INSTRUCTIONS FOR EACH GAME

CRICKET CUT-THROAT

- For 2, 3 or 4 players.
- Played the same as Cricket, except that the player with a "closed" number adds points to those opponents with that number still open.
- Player that has "closed" all the numbers and has the lowest points wins the game.

CRICKET MARK 21™

- For 2,3, or 4 players
- Played the same as Cricket but there is no scoring.
- Player who closes all numbers first is the winner.
- Select Cricket Mark 21 by pressing the cricket button until '21' appears in the temporary score display.

League Option for Cricket/Cut-Throat/Mark 21™

- Can only be chosen when there are enough credits to start a four player Cricket/Cut-Throat/Mark 21™ game.
- Press the proper Cricket button(s) and then press 'LEAGUE".
- Players 1 and 3 are Team "A". Players 2 and 4 are Team "B".
- Teams are treated as single players.
- For Cricket and Cut-Throat, before scoring can begin on a segment, **both** players on one team must have the number closed. Scoring only occurs against the opposing team member(s) not having the segment closed.
  [Ex. If Team B has #18 closed and only Player 1 on Team A has #18 closed, Team B can score until Player 3 closes #18]
- The game ends when both members on a team close all segments 20-15 and Bullseye and have points according to each game's rules.

HANDICAP ROUND FEATURE

- "0" Round for handicapping players.
- Only handicapped player feats are tracked in "0" Round. Non-handicapped players are not affected in "0" Round.
- Handicap Round accurately scores number of darts thrown, feats and rounds for all players ; no player adjustments are necessary at game's end.

To enter Handicap Round "0":

1. Deposit correct number of coins for game/options.
2. Select 301/501/701/901, with/without options.
3. Push "PLAYER CHANGE" and wait for "THROW DART" light to come on.
4. Push "LEAGUE" button once to reach Round "0".
5. Using "PLAYER CHANGE" button, advance to handicap player(s) position to throw darts.
6. After Handicap Round, advance back to Player ONE for Round ONE and the start of match.

CAUTION - **In Round "0" if a player is accidentally "skipped over", advancing back around to that player will put you into Round One.**

PLAYING INSTRUCTIONS FOR EACH GAME

HONEST ERNIE

- Ernie can be a player in any game.
- Ernie can play up to three opponents.
- Ernie is always the last to throw in a round.
- Ernie is chosen by pressing the green 'ERNIE' Button AFTER a game and options have been selected.
- Ernie's skill level can be changed by repeatedly pressing the green 'ERNIE' button. Skill level is shown in the 'rounds' display.
- Ernie has 5 skill levels; 1 = Novice and 5 = Master.

FEATS READOUT

Each feat will be displayed at the end of the game for a period of 6 seconds each.
Pressing the "LEAGUE" button will speed the advance to the next feat.
The feats will cycle for two minutes.
The display will return to the ATTRACT mode unless credits remain.
If credits remain or are added during feats readout, a new game may be started.

SAMPLE DISPLAY SHOWING A "WIN" FEAT

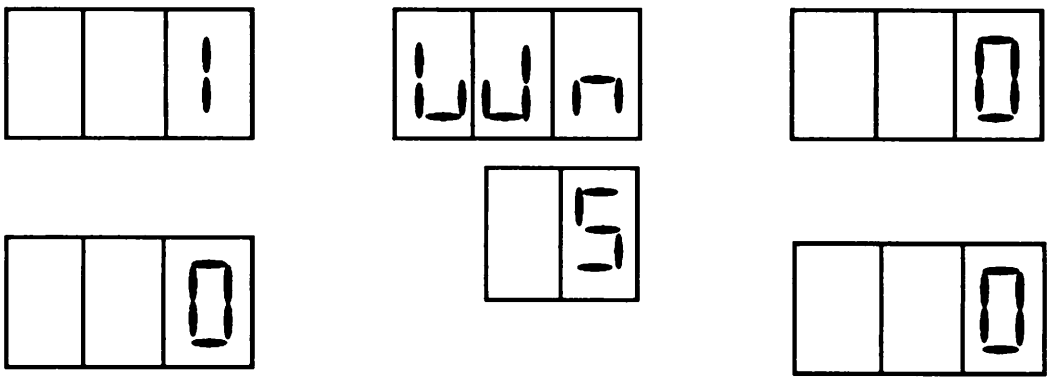

301/501/701/901 FEATS READOUT

FEAT	AS SHOWN ON TEMPORARY DISPLAY	DESCRIPTION
Points per Dart	PPd	Shows average points per dart for each player
Points per Round	PPr	Shows average points per round for each player. Calculated only during the first three rounds of play.
WIN	Wn	A win
Assist	Ast	An assist while playing 'team' with a partner
6th Dart Out (301)	bdo	A win in 6 darts

301/501/701/901 FEATS READOUT

7th Dart out (301)	7do	A win in 7 darts
8th Dart out (301)	8do	A win in 8 darts
9th Dart out (301/501)	9do	A win in 9 darts
10th Dart out (501)	10d	A win in 10 darts
11th Dart out (501)	11d	A win in 11 darts
12th Dart out (501)	12d	A win in 12 darts
4th Round out (301)	4tH	A win in the 4th round
5th Round out (501)	5tH	A win in the 5th round
Hat Trick	HAt	3 Bulls eyes in one turn
TON	ton	A score of 100 to 150 in one turn
High TON	Htn	A score of 151 or greater in one turn
Total number of Darts Thrown	tdt	See Dip Switch setting SW1, Position 6.

NOTE: A "bust" situation will cancel any feat obtained in that player's round. The Hat Trick can be accomplished on an inner or an outer Bull's eye. When 100 points or more are accumulated in a Hat Trick, the Hat Trick will be the only feat recorded.

CRICKET FEATS READOUT

Feats will be displayed automatically one minute after the game has ended. To display feats sooner, press 'LEAGUE' button.

The feats that have been achieved will be displayed as follows:

FEAT	AS SHOWN ON TEMPORARY DISPLAY	DESCRIPTION
Marks per round	mr	Average marks per round
WIN	Win	A win
Assist	Ast	An Assist while playing 'team' with a partner.
8 Dart out	8do	Finish in 8 darts
9 Dart out	9do	Finish in 9 darts
9 Mark	9m	9 marks in one round
8 Mark	8m	8 marks in one round
7 Mark	7m	7 marks in one round
6 Mark	6m	6 marks in one round
5 Mark	5m	5 marks in one round
White Horse	WH	Marking 3 different unmarked triples in one round
Hat Trick	HAt	Marking 3 Bulls eyes in one round

NOTE: Darts thrown which hit numbered segments closed by all players do not count as marks.

BOOKKEEPING

Bookkeeping is a programming method to set prices, round limits and Bullseyes for individual games as well as a system to keep record of games played and credits entered. Information is retained in a battery backed up RAM. The validity of the RAM is tested every time the game is powered up. (See the Self-Checking Software section in this manual.)

Bookkeeping features two modes:

The Programming mode, displayed as **"Prg"**, allows the operator to set the price for each game and options, to set the bullseye for each game, to set the round limit for each game, and to set the credit value for each coin slot.

The Bookkeeping mode, displayed as **"StA"** (statistics), allows the operator to determine the amount spent for each game, the total credits entered in the left and the right coin slots, and the total number of credits spent.

The following parts of the game are used to enter and change data:
On the Controller Board:

- SW4: (TEST) Press once to enter the TEST mode (**tSt**).
- SW5: (RESET) Press once to reset and exit from **"StA"** or **"Prg"**.

On the Target (unless otherwise noted):

- Press the segment corresponding to the number you wish to enter.
  When entering numbers for the security code, segments 1-20 may be used.
  When entering numbers for all other modes, press the corresponding segments 0-9.
- Doubles and triples have the same value as singles To enter zero, press Bullseye.

Security Code

IMPORTANT! It is necessary to enter a security code before using the bookkeeping mode or the programming mode.

- The security code prevents an unauthorized person from changing any settings.
  Entering an invalid security code will return the game to the attract mode.
- The four digit security code is set at "0000" (four bullseyes) on a new game.
- The security code should be changed to another numerical sequence to insure against unauthorized access.

Changing the Security Code

1. Press the TEST switch (SW4) on the Controller board. **"tSt"** will appear in the Temporary Score display.
2. Press and hold the "PLAYER CHANGE" button while entering the OLD code via the target segments. **"Ent"** will appear in the "Temporary Score" display.
3. Release the "PLAYER CHANGE" button and enter the NEW code via target segments1-20. Each digit of the security code will correspond to players 1-4 displays.
4. Press the "PLAYER CHANGE" button to return to the ATTRACT mode.

SERVICE NOTE: If installing a RAM chip that is not factory initialized, the security code will default to 0000 and all credits, round limits and statistics will be cleared and set to factory defaults.

BOOKKEEPING

PROGRAMMING MODE

This mode is used to change the price of games, the round limits of games, the number of credits per coin, the coin counter advances per coin, the language of the "CREDITS PER PLAYER" message, and the Bullseye setting for games. Once in the **"Prg"** mode, any of these values may be altered without leaving and re-entering the **"Prg"** mode.

Getting in and out of the Programming Mode (Prg)

While in the ATTRACT mode or SELECT mode:

- Press SW4 (TEST on the controller card) to enter the TEST mode (**tSt**).
- Press the "LEAGUE" button **twice** to enter the Programming Mode **"Prg"**.
- Enter the security code.
- If desired, change data. See instructions on pages 25 to change Credits per game, Bullseye, and Round Limit settings and instructions on page 26 to change Cash/Play programming.
- To exit Prg mode, press "PLAYER CHANGE" or reset SW5 to return to ATTRACT or SELECT mode.

Credits per Game, Bullseye and Round Limit Factory Setting Chart

The chart to the right lists the settings that have been preprogrammed into your game.

The blank columns have been provided so that any customized settings may be documented.

LEGEND:
BE = 50 point **single** Bullseye
dBE = 25 point **outer** Bullseye
50 point **inner** Bullseye

1 option = Double In **OR** Double Out
OR Master's Out

2 options = Double In **AND** Double Out

	Bullseye Setting		Round Limits		Credits Per Game	
HIGHSCORE	BE		10		1	
SHANGHAI	BE		7		1	
301	BE		12		1	
301 & 1 opt	BE		20		2	
301 & 2 opt	BE		20		2	
501	BE		20		2	
501 & 1 opt	BE		25		3	
501 & 2 opt	BE		25		3	
701	BE		25		3	
701 & 1 opt	BE		30		4	
701 & 2 opt	BE		30		4	
901	BE		30		4	
901 & 1 opt	BE		35		5	
901 & 2 opt	BE		35		5	
CRICKET	dBE		30		3	
CUT-THROAT	dBE		30		3	
MARK 21	dBE		20		2	
ERNIE	1 additional credit for any game.					

BOOKKEEPING

To Change Credits per Game, Bullseye and Round Limit Programming for Individual Games -

While in the "**Prg**" mode:

- Press the button of the game requiring a change. The lamp for that game will light.
  CPg (credit per game) is displayed in player 1's score and the number of credits per player for that game is displayed in player 2's score.
  The bullseye setting (BE or dBE) will be displayed in player 4's score. (See FIGURE below)

"Credits Per game"	**CPg**	**2**	**Designates number of Credits per game.**
		BE	**Designates Bullseye setting Press segment #20 to toggle between BE/dBE**

- To change Credits per game, press target segments 0-9 to enter new value. New value will be shown in the temporary score display.

- To change Ernie's cost - with any game button selected (Ernie's cost need not be programmed for each separate game), press "Ernie". Display will show "For Ernie add X credits". Use any target segment to toggle between 0,1,2,3, and 4 additional credits for Ernie. Press"League" to store Ernie's cost setting.
  Note: Ernie's cost can not be more than the game he's playing. Ex: Ernie has been set for 3 additional credits and he will be playing a 301 game which is set at 1 credit. Ernie's cost will default to 1 additional credit.

- To change the Bullseye setting, press segment #20 (or any segment between 10-20). Player 4's display will alternate between BE and dBE.

- Press the LEAGUE button once to store the new settings, or to go on to Round Limit Programming if no changes were made.

- To display the round limits setting for the game, press the LEAGUE button again (round limits display shown below).

"round Limit"	**r L**	**2 0**	**Designates Round Limit set for selected game**

NOTE: Valid round limits are 1-99 or Unlimited (UL on the display) for all games and options except HIGH SCORE, which cannot be set to unlimited rounds, and SHANGHAI, which can be 7 rounds only.

- To enter a round limit from 1-99 use target segments 0-9, or to select unlimited rounds press the Bullseye .

- The new round limit will be shown in the temporary score display.
- To store the round limit, press the "LEAGUE" button.

- Pressing the "LEAGUE" button repeatedly (without entries) will cause the display to toggle between 'Credit per Game' (**CPg**) and 'Round Limit' (**r L**) programming.

BOOKKEEPING

Cash/Play Programming

This feature allows the operator to control the credit value for each coin and is useful when coins of different values are used.

NOTE:
Your game has a factory setting of **1 QUARTER = 1 CREDIT = 1 COIN COUNTER ADVANCE** for each of the standard coin mechs installed. These mechs have been wired into coin channels 1 and 2. (Alternate coin or bill acceptors requiring additional channels may be installed). Your game has a total of 7 coin channel inputs available. 8 channels are available using a Sentinel mechanism.

To view or change any portion of Cash/Play Programming-

While in the "**Prg**" mode:

- Drop a coin into the right slot. The display will show the number of credits for that coin and the channel number for that coin. (See figure below).

Cr 1

CHn 2

- Change the number of credits by pressing the appropriate target segment(s). Valid entries for credits are 1 to 99. The value will be displayed in the temporary score.

- Press the "LEAGUE" button to store the change. The new credits value will move into player 2's score.

- Press the LEAGUE button again. Players' 1 and 2 scores will now show the number of counter advances for that coin channel. (See figure below)

CA 1

CHn 2

- Change the number of counter advances by pressing the appropriate target segments. The counter advance value may be from 1 to 99.

- Press the "LEAGUE" button to store the change.

- Use the same procedure for the left slot (and any additional coin channels used).

- Press the "Player Change" button to return to the "**Prg**" mode.

BOOKKEEPING

Messages:
The message "CREDITS PER PLAYER" can be displayed in different languages.

NOTE: **Your game has a factory setting in the English version. If you wish to retain the English version, omit the instructions below. If you would like to use a German, French, Italian or Spanish version, follow the steps below.**

While in the **"Prg"** mode:
- Press the "MASTERS OUT" button for the currently programmed message.
- Press again until the message in the desired language is displayed.
- Press the "LEAGUE" button to store the message or to exit the message programming routine.
- Press "PLAYER CHANGE" to exit the **"Prg"** mode.

Easy Factory Setting:
To return to the factory game/credit settings without having to reprogram each game:

While in the **'Prg"** mode:
- Press the "MASTERS OUT" button **once** to display the programmed message currently used.
- Press the "MASTERS OUT" button **again** until the message in the desired language is displayed.
- **Press** the "LEAGUE" button **and** the "MASTERS OUT" button **simultaneously.**
- The game will **beep** to signal that the factory settings have been reprogrammed.

BOOKKEEPING MODE

This mode is used only to view the credits entered and the games played. Refer to the programming mode to change the game information.

Getting in and out of the Bookkeeping Mode (StA)

While in the ATTRACT mode or the SELECT mode:
- Press SW4 (TEST on the controller card) once to enter the TEST mode (**tSt**).
- Press the "LEAGUE" button **once** to enter the Bookkeeping Mode **"StA"**
- Enter the security code..
- Obtain the desired statistics using the game switches.
- Press "PLAYER CHANGE" to retain totals and exit (**all totals are retained** and the game will return to the ATTRACT mode) or press TEST button SW4 to delete totals and exit (**all totals will be erased** and the game will return to the TEST mode (tSt). Programmed settings are not affected.

NOTE: - If the RESET button SW5 is accidentally pressed or power is turned off, data will be retained and the game will return to the ATTRACT mode or the SELECT mode if credits were left over when bookkeeping was started.

BOOKKEEPING

Coin Slot Totals

The information will be displayed as follows:

C H n

"C" "X"

"C" "X"

The "C" represents coin channels (1-8) which have been programmed for use. The "X" will be the number of counter advances for the channel displayed. If more than 2 channels have been programmed, pressing the MASTERS OUT button will advance the display though all programmed coin channels.

Press the LEAGUE button for a total sum of all coin channels.

Game Totals

Press any game/option button to obtain information on games.
The information will be displayed as follows:

P "X"

C "X"

The upper right digit following "**P**" represents the number of players in the selected game. The lower right digit following "**C**" represents the number of credits spent for the game.
[Example: **P=4** and **C=8** indicates that four players used two credits each.]

To return to coin slot totals:
- Press "MASTERS OUT" for "Coin Slot Totals" information.

To exit without clearing totals:
- Press "PLAYER CHANGE" button.

To exit clearing all totals to zero:
- Press "TEST" button, SW4.

SELF-CHECKING SOFTWARE

The following self-checking tests are done automatically by the software in the game.
1. POWER-UP SWITCH TEST - Used to check the ten (10) front panel switches. If a switch is stuck closed, the three (3) character identification will be displayed and a tone will sound (see next page for abbreviations).

2. TARGET WATCHDOG - Used to check target switches. If a segment is stuck closed, a "beep" will be heard while " StUC tArgEt" scrolls in the display, alternating with the location of stuck segment. Front panel lamps will also flash.

3. POWER-UP RAM TEST - Used to test RAM for valid data on power-up. If data problems are found, the RAM will be reprogrammed with factory settings and the credit message will be blanked. In the attract mode, decimal points in the display will indicate a reprogrammmed Ram. If this condition occurs, replacing the RAM is recommended.

DIAGNOSTIC ROUTINES

Each game has built-in diagnostic software. The scope of this software is to test the electronic hardware, to verify that the game is functioning properly, and to indicate problem areas.

There are two push button switches located on the Controller board inside the electronics compartment:

SW5 - right hand switch is a RESET button. Pressing this switch resets the game.
SW4 - left hand switch is the TEST button. Pressing this switch puts the game in self-diagnostic mode.

To enter into the TEST (tSt) mode, press the test switch. The display will read:

The values which appear in player 3 and player 4's display are a hexidecimal value for the RAM CRC. These values are used in the factory for verification purposes only (the values on your game may not be identical to those shown here).

To exit the TEST mode (tSt), press the "PLAYER CHANGE" button. The game may now be used as normal.

The following **nine tests** may be used while in the TEST mode (tSt).

Test One - Push Button Switch Test
Press test switch SW4 once to enter the TEST mode and press it again to activate this test.
NOTE: **The game must first be in the TEST mode (tSt).** Temporary score will show **t01** until the first switch is pressed. This test will check the operation of all the front panel switches. As each switch is pressed, the Temporary Score will display three (3) characters to identify it.

DIAGNOSTIC ROUTINES

The characters displayed for each switch are as follows:

HIS

(HIGH SCORE SWITCH)

SHI

(SHANGHAI SWITCH)

301

(301/501/701/901 SWITCH)

Crk

(CRICKET/MARK 21™ SWITCH)

Ern

(ERNIE SWITCH)

din

(DOUBLE IN SWITCH)

dot

(DOUBLE OUT SWITCH)

mno

(MASTERS OUT SWITCH)

LEA

(LEAGUE SWITCH)

PLC

(PLAYER CHANGE SWITCH)

To exit this test press the TEST switch and return to the TEST mode (**tSt**).

DIAGNOSTIC ROUTINES

Test Two - 7-Segment Display Test

To activate press the "HIGH SCORE" button. Each display will cycle through digits 0-9. After all segments have been checked this test will automatically return to the TEST mode (tst).
To interrupt this test press the "HIGH SCORE" button.

Test Three - Audio Test

To activate press the "SHANGHAI" button. "t03" will appear in temporary display. A tone will be generated to check and adjust the volume of the audio circuit. The volume adjustment is located on the Controller board in the very upper right corner at location R33.
To exit this test press the "SHANGHAI" button.

Test Four - Target Segment Test

To activate press the "301" button. The temporary score display will show "t04" and then be blank.
This test is used to check that each segment of the target will register darts thrown at it. As each segment is depressed, its value or designation will be shown in the temporary score display. A double or triple will be shown as a "d" or "t" preceding the number of the segment [Ex. A double 20 is displayed as d20].
In addition to the temporary score, player's 1-3 scores show the status of dip switches 1-3 respectively. The status is shown as an hexadecimal number.
To exit this test press the "301" button.

In the TEST mode (tSt) to mark the difference: 6 = 6 b = b

Test Five - Lamp Test

To activate press the "CRICKET/MARK 21™" button. Each lamp will light individually in the following order: Remove Darts, Logo, Throw Darts, Player Change, each game selection button from right to left and the overhead light.
After each lamp has been checked, this test will automatically return to the TEST mode (tst).

Test Six - Cricket Display Test

To activate this test press the "ERNIE" button. "t06" will appear in temporary display. The LEDs will light starting with Player 1 and Player 3, 20 through Bull, then Player 2 and Player 4, 20 through Bull. This will be followed by Cricket backlighting lamps Player 1- Player 2 - Player 3 - Player 4, each of the eight player lamps, then all the LEDs in the Dart Indicators.
It is possible to skip from one phase of the test to the next phase of the test by pressing the "ERNIE" button. For example, it is possible to go into the Cricket backlighting lamp test before the Player LED test is finished.

Test Seven - Burn-In Test

To activate this test press the "DOUBLE IN" button. This test is a production burn-in test used to cycle on and off all the lamps and LEDs and their associated circuitry.
Press the "DOUBLE IN" button. All lamps will light.
Press the "DOUBLE IN" button **again**: all lamps will turn off, all LEDs will light.
Press the "DOUBLE IN" button **once again** to return to TEST mode.

DIAGNOSTIC ROUTINES

NOTICE: For Tests Eight and Nine to function properly, be sure that the jumpers at JU1 and JU2 are in the correct position to enable the circuitry. We suggest that Test Three and Test Five be completed before attempting these tests.

Your game is shipped to you with the Tru-Score II (Dart Sensor) and Infrared Sensor engaged.

The Dart Sensor selection jumper is located below SW4 (TEST) on the Controller board at location JU1. To disengage it, move the jumper clip to the right covering the middle and right pins.

To disengage the **Infrared Sensor Feature** open Position 8 of DIP Switch 1.

NOTE: Always disengage the Dart Sensor feature at the jumper clip and the Infrared Sensor feature at the DIP Switch. DO NOT disengage by unplugging the cords or ribbon cable - unplugging WILL NOT fully disengage the circuits.

Test Eight - IR Sensor Test

To activate this test press the "DOUBLE OUT" button. "t08" will appear in the temporary score display and the "LOGO" lamp will light signifying the test is active. To test the IR Sensor, stand in front of the game at arm's length. The "THROW DARTS" lamp should be lit. Move your hand slowly upward towards the target. As your hand enters the IR sensor detection area (a few inches below the lower part of the dart catching ring), the "THROW DARTS" lamp should go out and the "REMOVE DARTS" lamp should light. Remove your hand and ensure that the "REMOVE DARTS" lamp goes out and the "THROW DARTS" lamp lights. If adjustments are necessary, refer to the Infrared Sensor Adjustment Procedure on the following page.
To exit this test press the "DOUBLE OUT" button.

Test Nine - Dart Sensor Test

To activate this test press the "MASTERS OUT" button. "t09" will appear in the temporary score display and the "LOGO" lamp will flash signifying the test is active. To test the dart sensor and its circuitry, tap the front panel and listen for an audible "Beep" from the speaker. The "REMOVE DARTS" lamp will flash as the "Beep" is sounded.
If no "Beep" is heard, an increase to the sensitivity may alleviate the problem. The sensitivity adjustment is located at R17 on the controller card, just to the left of J4 and J5. (See Dart Sensor Adjustment Procedure on the following page).
To exit this test press the "MASTERS OUT" button.

This concludes the Diagnostic routines.

Press the "RESET" button on the CPU Board or the "PLAYER CHANGE" Button to return to the ATTRACT mode.

INFRARED SENSOR ADJUSTMENT PROCEDURE

To adjust the IR Sensor sensitivity:

- Put the game in the TEST mode (**tSt**) by pressing SW4 on the Controller board and the "DOUBLE OUT" button.
- Access the potentiometer through the hole on the right side of the IR sensor housing with a small blade screwdriver. The sensitivity is decreased by turning the screwdriver in a clockwise direction and is increased by turning in a counter-clockwise direction.

NOTE: The following steps should be performed without darts in the target or dart catching ring and while standing to the side of the game. Also make sure the target door is in place.

1) Turn the potentiometer back and forth to find the sensitivity threshold of the the sensor. This is the point at which the "THROW DARTS" lamp turns off and the "DON'T THROW DARTS" lamp lights.

2) Slowly turn the potentiometer clockwise until the "THROW DARTS" lamp comes on.

3) Verify the adjustment:
- Stand in front of the game at arm's length from the target. Starting at the Cougar logo below the target, move your hand upward towards the IR Sensor. The threshold point should be at a level where the hand passes between the dart catching ring and the bottom of the door.

4) Repeat steps 1 through 3 until the IR sensor is properly adjusted.

DART SENSOR ADJUSTMENT PROCEDURE

NOTE: Set up and test should be done on site.

- Put the game in the TEST mode (**tSt**) by pressing SW4 on the Controller board and the "MASTERS OUT" switch. The center lamp (logo) on the door will be flashing.

- Start with the lowest sensitivity setting on the potentiometer, R17 on the Controller board, full clockwise to 7 o'clock.

- Turn the potentiometer, R17, up to 6 o'clock setting.

- Throw bar darts at all areas on the door. (Bar darts have the lightest weight.) Dart detection is indicated by a short tone and "Remove Darts" lamp will flash.

- Repeat this procedure, using small increments to turn up the potentiometer R17, counter clockwise until all darts thrown with reasonable force at the door are detected by the microphones.

CAUTION: DO NOT OVERSENSITIZE!
Loud music will cause an oversensitive Dart Sensor to deduct darts. However, when properly adjusted, the Dart Sensor can operate at up to 110 decibels sound level.

FINAL NOTE: If you choose to disengage the Dart Sensor, LEAVE THE DART SENSOR PLUGGED IN and disengage the circuit by moving JU1 to the LOCKOUT position. If this method of disengaging this feature is not followed, the potential for game performance problems exists.

GENERAL MAINTENANCE

To replace Lamps in the Upper Display:

- **Turn the game off and unplug from the wall outlet.**
- Tools needed:
  - #1 Phillips screwdriver
  - #2 Phillips screwdriver
- Remove the four corner screws holding the Shroud and Display sub-assembly.
- Slowly pull the Shroud and Display sub-assembly and turn it over.
- Remove the quick-disconnect tab to disconnect the ground wire.
- Disconnect the in-line power connector and the ribbon cable.
- Remove the four screws holding the marquee.
- Replace lamps as necessary.

  CAUTION:
  - Make sure the ground wire is reconnected.
  - Make sure the wires are tucked under the channel cover when replacing the Shroud and Display sub-assembly.

To remove debris and tips from the target:

- **Turn the game off.**
- Open the lock on the Cabinet Top Dart Door.
- Remove the door.
- Flip down the right and left latches in the upper corners of the Spider DCR Board.
- Carefully lower the Spider DCR Board and remove debris and tips.

TROUBLE SHOOTING

This troubleshooting section provides quick solutions to game problems and guides the more experienced technician in pinpointing possible trouble areas.
This section is not intended to be a service guide.

GENERAL SYMPTOMS	POSSIBLE CAUSE/SOLUTION
GAME APPEARS DEAD	• Game unplugged • Main power switch off • Power cord not fully connected to the power supply • Fuses blown. F1, F2 on High Voltage Board. F5, F6 on Low Voltage Board.
UPPER DISPLAY DEAD OR GARBLED	• Check power cable (J3) from display. • Refer to other symptoms in the Upper Display section.
GAME CONTINUALLY BEEPING AND LIGHTS FLASHING	• Segment jammed. (Temporary Score shows the segment number) - Push on segment to release. • Dart tip stuck in/or between segments. - Lower DCR board and inspect for debris or tips.
GAME CONTINUALLY BEEPING, NO LIGHTS FLASHING	• Stuck game switch. (Temporary Score indicates which switch) - Inspect switch for jamming. - If switch is good swap Controller board.
OVERHEAD LAMP OUT	• Check fluorescent lamp and starter. • Plug in light fixture to power supply. • Make sure connections correspond to High Voltage power supply. • Swap High Voltage Power Supply board. • Swap Controller board.
OVERHEAD LAMP NOT GOING OUT	• High Voltage Power Supply board Q1, U1. • Controller Board U6, U5.

TROUBLE SHOOTING

GENERAL SYMPTOMS	POSSIBLE CAUSE/SOLUTION
THROW/DON'T THROW PANEL LAMPS OUT	• Check bulbs (Refer to parts list for proper replacement.) • Controller board connection J3, IC'S U3, U5, U6, U7, U8, U9, Q4, Q5. QUICK FIX: Swap Controller Board.
GAME SWITCH LAMPS NOT LIGHTING	• Light bulb blown. (See parts list for proper replacement.) • Controller board connectors J1 or J2, ICs U2, U3. IC's U3, U4, U8, U9 OR U10. See schematic for driver display associated with lamp in question. • Fuse F3 may be blown. QUICK FIX: Swap Controller board.
WHEN TURNED ON, GAME DISPLAYS SCORES FROM LAST GAME PLAYED	• Hit necessary segments to end game. • Power failure recovery option. - See dip switch setting for power failure recovery. Dip Switch 1, Position 5.
GAME LOCKING UP (NO RESPONSE FROM COIN GAME SWITCHES OR TARGET, OR GAME RESETTING AT RANDOM	• Grounding problem - Make sure game is plugged in a three-wire outlet (earth ground). - Make sure ground wire from coin mechanism frame is securely fastened to the power supply chassis. - Check connections from transformer to power supply boards. - Check power supply harness connections for a clean tight fit. - Check tightness of hardware. - Make sure the socket connections on the Controller board are clean and tight. QUICK FIX: Swap Controller board. (See "Upper Display" in this troubleshooting section.)
GAME LOCKING UP AFTER FIRST THREE DARTS	• Check IR Sensor calibration. (Refer to Test Eight in the Diagnostic routines in the manual.)

TROUBLE SHOOTING

GENERAL SYMPTOMS	POSSIBLE CAUSE/SOLUTION
WILL NOT RESUME GAME LOST IN PROGRESS AFTER POWER FAILURE	• Power failure recovery disengaged • Check dip switch setting • Check RAM U16. Re-enter security code (see "Security Code" in Bookkeeping section in manual and reprogram RAM or install a pre-programmed factory RAM.
GAME FEATURES NOT WORKING	• Software related. - Check EPROM for correct version (number listed under "Table of Contents" in the manual. - Refer to "Dip Switch Settings" section in the manual.
DIP SWITCH FEATURES NOT WORKING	• Debris in Dip Switch, bad connection. • Dip Switch settings - Refer to "Dip Switch Settings" section in manual. QUICK FIX: Swap Controller Board.
NOT READING GAME SWITCHES	• Check corresponding switch for closure. • Controller connectors J1 or J2, ICs U1 or U4. • Check if switch mechanism is snug in plastic housing. QUICK FIX: Swap Controller board.
301 AND/OR CRICKET GAME ENDING BEFORE FINISHED	• 301 round limits enabled. - See "Programming Mode" in Bookkeeping section.)

TARGET SYMPTOMS	POSSIBLE CAUSE/SOLUTION
GAME NOT DEDUCTING NON-SCORING DARTS	• Dart Sensor circuit disabled. - Move Ju1 off lockout. • Verify connections to Matrix Interconnect board J3, J4. • Sensivity set too low. - Refer to "Dart Sensor Adjustment Procedure" in the manual. • Controller board IC U21 • Target door not tight against the target.

TROUBLE SHOOTING

TARGET SYMPTOMS	POSSIBLE CAUSE/SOLUTION
GAME DEDUCTING DARTS ERRATICALLY	• Sensitivity too high. - Refer to the "Dart Sensor Adjustment Procedure" in the manual. • Music or other noise is causing a malfunction. - Refer to the "Dart Sensor Adjustment Procedure" in the manual.
TARGET "DEAD" DURING GAME AND TEST MODE (TEST 4 -DIAGNOSTIC ROUTINES) **NOTE:** THE TERM "DEAD" IS USED WHEN TARGET SEGMENT DOES NOT REGISTER DARTS THROWN AT IT.	• Target unplugged at J1 or J2 of Matrix Interconnect board. • Check Controller board U9, U10, U11.
TARGET "DEAD" DURING GAME ONLY	• Dart Sensor circuitry malfunction - Disable dart sensor circuitry by putting JU1 on the Controller board in the lock out position. - Check U14 on the Controller board. - Check dart sensor connections.
ONE OR MORE QUADRANTS NOT SCORING (SEE TABLE NEXT PAGE)	• Check Matrix Switch and connections. • Controller board U11, U9, U10.
FOUR RELATED SEGMENTS OF TARGET NOT SCORING (SEE TABLE NEXT PAGE)	• Check Matrix Switch and connections. • Check Controller board U9, U10, U20.
ONE SEGMENT, OR SEVERAL UNRELATED SEGMENTS NOT SCORING	• Bad physical contact between target segment and Matrix Switch. - Check for short on Matrix Interconnect board. • Bad switch pad.
BULLSEYE NOT SCORING CORRECT AMOUNT OF POINTS	• Bullseye Programming. - See "Programming Mode" in Bookkeeping section.

TROUBLE SHOOTING

TARGET QUADRANTS

THERE ARE FOUR QUADRANTS DETERMINED BY THE STROBE LINES:

QUADRANT 1	PIN 19	2, 15, 10, 6, 13, BE
QUADRANT 2	PIN 20	4, 18, 1, 20, 5
QUADRANT 3	PIN 2	16, 7, 19, 3, 17, DBE
QUADRANT 4	PIN 1	12, 9, 14, 11, 8

RELATED SEGMENTS IN GROUPS OF FOUR.

d2	2	d15	d10	10	d6	6	d13
d4	4	d18	d1	1	d20	20	d5
d16	16	d7	d19	19	d3	3	d17
d12	12	d9	d14	14	d11	11	d8

13	BE	T2	T10	T15	T6	T13
5		T4	T1	T18	T20	T5
17	DBE	T16	T19	T7	T3	T17
8		T12	T14	T9	T11	T8

UPPER DISPLAY SYMPTOMS	POSSIBLE CAUSE/SOLUTION
DISPLAYS GARBLED, RANDOM LAMPS, NO COIN ACCEPTANCE TONE	• Controller board U12 or U15. QUICK FIX: Swap Controller board.
DISPLAYS GARBLED BUT COIN ACCEPTANCE TONE OK	• Controller board J11, U24. • Check tightness of hardware • Check shroud regulator voltages (+5V, +3V DC). QUICK FIX: Swap Shroud assembly or Display board.
COIN MECHANISM CREDITS	**POSSIBLE CAUSE/SOLUTION**
GAME FUNCTIONING BUT NOT GIVING CREDIT	• Coin cable harness. • Controller board J14, U18. • Coin switches not programmed. - Refer to "Cash/Play Programming" in Bookkeeping section in the manual.
GAME NOT ACCUMULATING CREDITS OR APPEARS TO BE LOSING CREDITS	• Dip Switch setting. - Check position 1 on SW1. (See "Dip Switch Settings" section in the manual.)

TROUBLE SHOOTING

AUTOMATIC PLAYER CHANGE	POSSIBLE CAUSE/SOLUTION
GAME NOT CHANGING PLAYERS AUTOMATICALLY	• IR sensor's sensitivity set too low and not seeing the removal of darts. - Recalibrate IR sensor. (Refer to Test Eight in the Diagnostic Routines section) - Check Dip Switch for IR sensor engaged. - Check Cable at J12 on Controller board.
GAME CHANGING PLAYERS, BUT NOT SWITCHING TO "THROW DARTS"	• Dart still in the target. • IR sensor's sensivity set too high. - Recalibrate IR sensor. (Refer to Test Eight in the Diagnostic Routines section)
GAME CHANGING PLAYERS ERRATICALLY	• IR sensor's sensivity is set on threshold point. - Recalibrate the IR sensor. (Refer to Test Eight in the Diagnostic Routines section) - Make sure R35 has been clipped from Controller Card.

SOUND SYMPTOMS	POSSIBLE CAUSE/SOLUTION
NO SOUND	• Volume down. - Turn pot R33 (CW) • Speaker harness unplugged. - Check J6 on the Controller board. - Check Controller board Q6 or ICs U28, U12, U7. QUICK FIX: Swap Controller board.
GAME CONTINUALLY BEEPING AND LIGHTS FLASHING/NOT FLASHING	• Refer to general symptoms section.
GARBLED SOUND	• Speaker. • Controller board ICs U28 or Q6.
CONSTANT HUMMING SOUND	• Grounding problem. - Refer to game locking up or resetting at random. • Check Controller board U28, Q6. QUICK FIX: Swap Controller board. Swap Power supply.

TROUBLESHOOTING

BOOKKEEPING-CASH/PLAY	POSSIBLE CAUSE/SOLUTION
CREDITS PER GAME NOT MATCHING FACTORY SETTING	• RAM programmed improperly - Refer to "Programming Mode" in "Bookkeeping" section in the manual.
CREDITS PER PLAYER MESSAGE NOT IN PROPER LANGUAGE	• Programmed incorrectly. - Refer to "Messages" in the "Bookkeeping" section in the manual.
TOTALS ARE NOT STORED FOR EACH GAME	• RAM not initialized. - Refer to "Changing Security Code" in "Bookkeeping" section in the manual. • Change RAM, U16 - Re-enter security code (see "Security Code" in the "Bookkeeping" section in the manual and reprogram the RAM or install a pre-programmed factory RAM.
GAME RETURNING TO ATTRACT MODE WHEN SECURITY CODE IS ENTERED	• Invalid security code. - Enter 4 bullseyes If successful, check cash/play programming and enter a new security code. If unccessful, change RAM to a factory initialized RAM. (Refer to "Security Code" in the "Bookkeeping" section in the manual.
" CREDITS PER PLAYER" MESSAGE BLANK	• Problem with the battery backed-up RAM not retaining data. - Replace with a factory initialized RAM.

PARTS LISTS

SCHEMATICS

DIAGRAMS

VALLEY RECREATION PRODUCTS, INC.

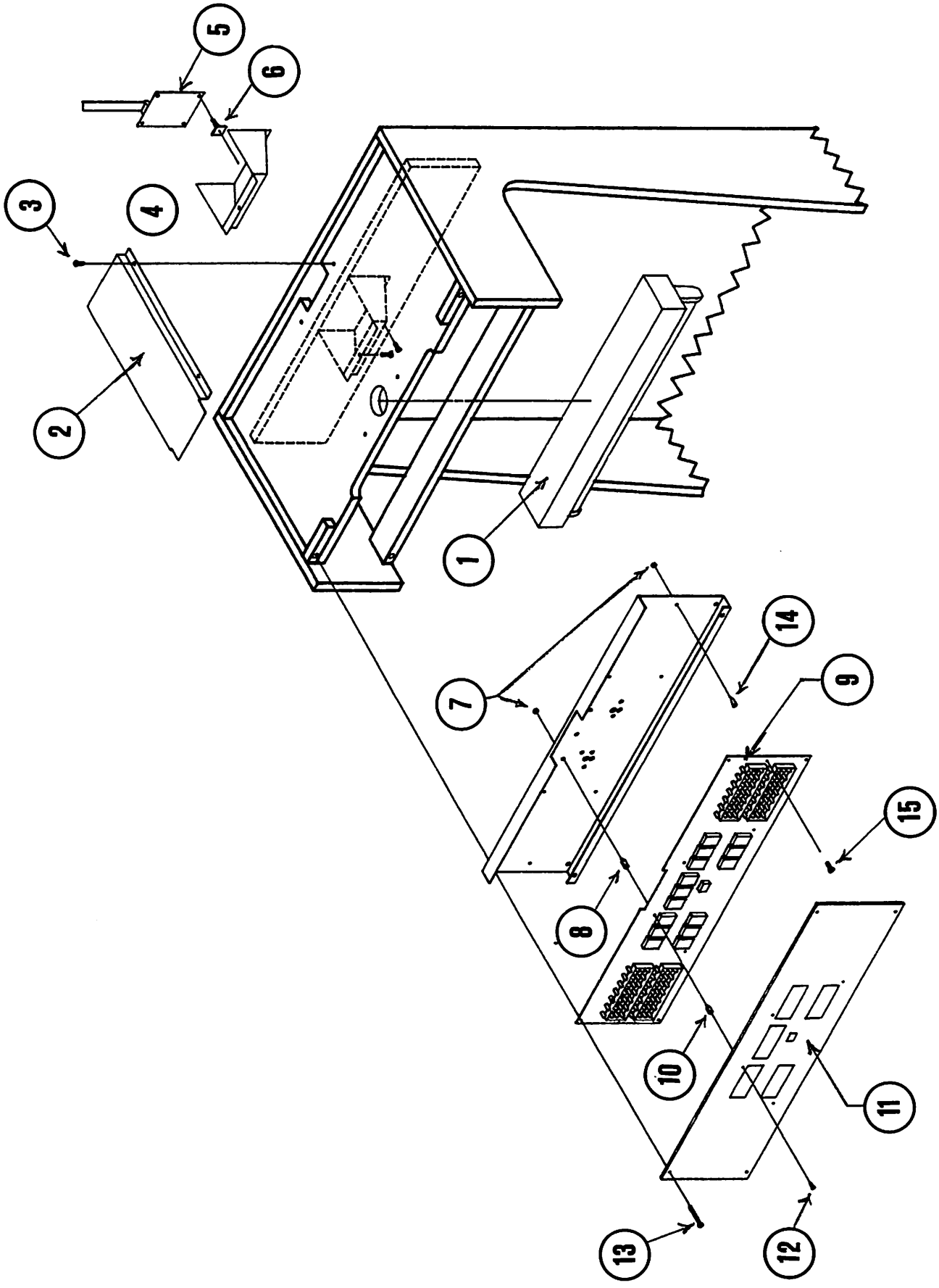
1
2
3
4
5
6
7
8
9
10
11
12
13
14
15

LIGHT HOOD AND UPPER DISPLAY ASSEMBLIES PARTS LIST

1	G81	Light Fixture, Fluorescent
2	206-0275	Channel Cover
3	201-0210	8 x 1/2 Phil, PH type 17, Zinc Plated
4	R03	IR sensor Enclosure Assembly
5	A55	PCB Assembly, IR Sensor
6	205-0363	PCB Mount, adhesive backed
7	203-1001	KEP Nut #4x40
8	206-1064	Standoff 4-40x1/2'
9	A60	PCB Assembly, Upper Display with Cricket
10	206-0253	Standoff 4-40x3/8"
11	206-0643-0	Universal Marquee Panel
12	201-0114	Machine Screw #4-40x3/8", Pan, Phillips, Black Oxide
13	201-0099	Machine Screw #8-32x1-1/2, Pan, Phillips, Black Oxide
14	205-0492	Spacer, Nylon, 3/16 round, 1/2"
15	201-0018	Machine Screw, #4-40x3/4", Pan, Phillips, Zinc

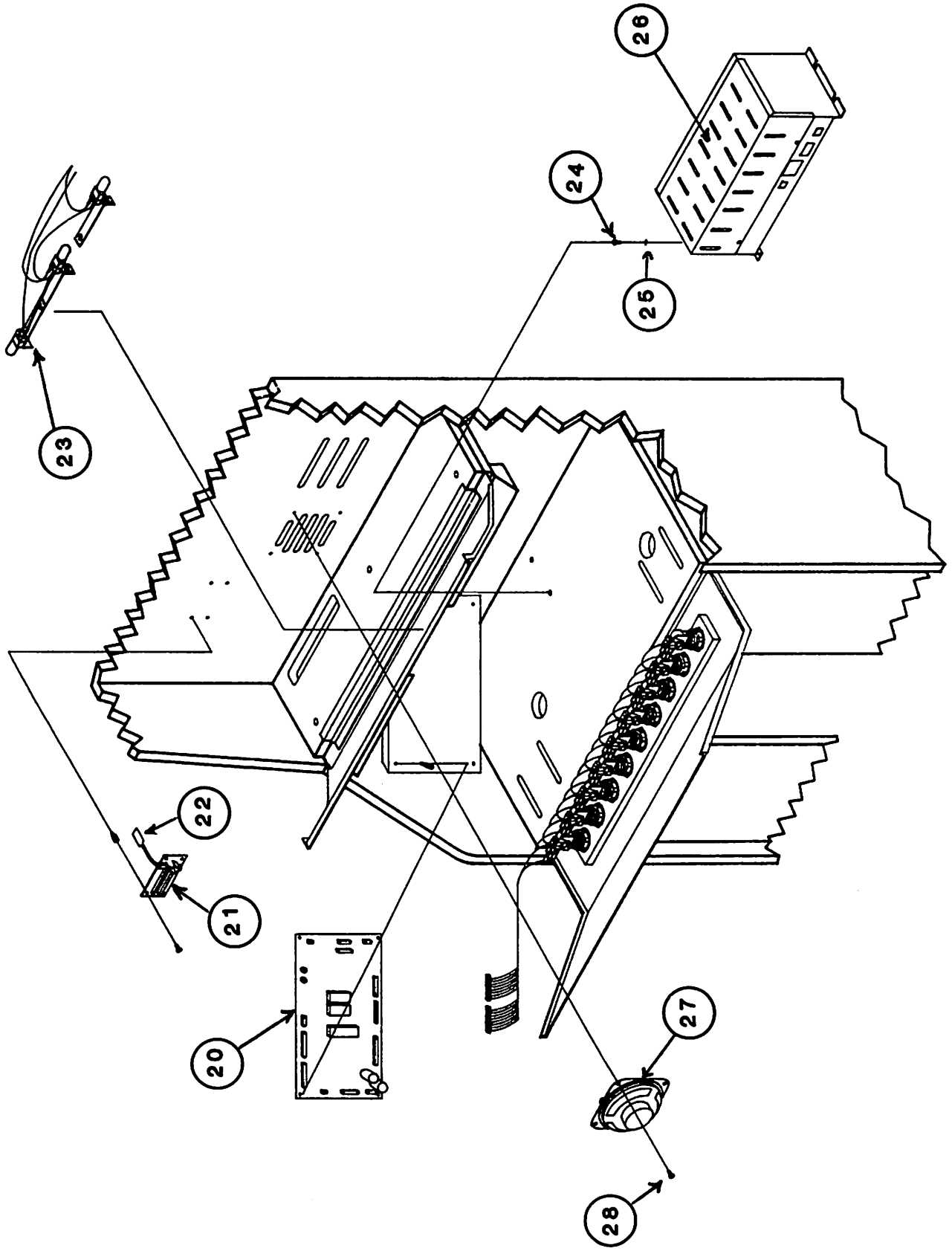
20
21
22
23
24
25
26
27
28

ELECTRONICS COMPARTMENT PARTS LIST

20	A73	PCB Assembly, Controller
21	A56	Matrix Interconnect Board
22	217-0273	Piezo film, with female connector
23	EN3	Harness, Lamp Assembly
24	201-1014	Machine Screw #10-32x3/4"
25	204-1003	Washer #10
26	H09	Power Supply, universal
27	G73	Speaker Assembly
28	201-1052	Machine Screw #8-32x3/8"

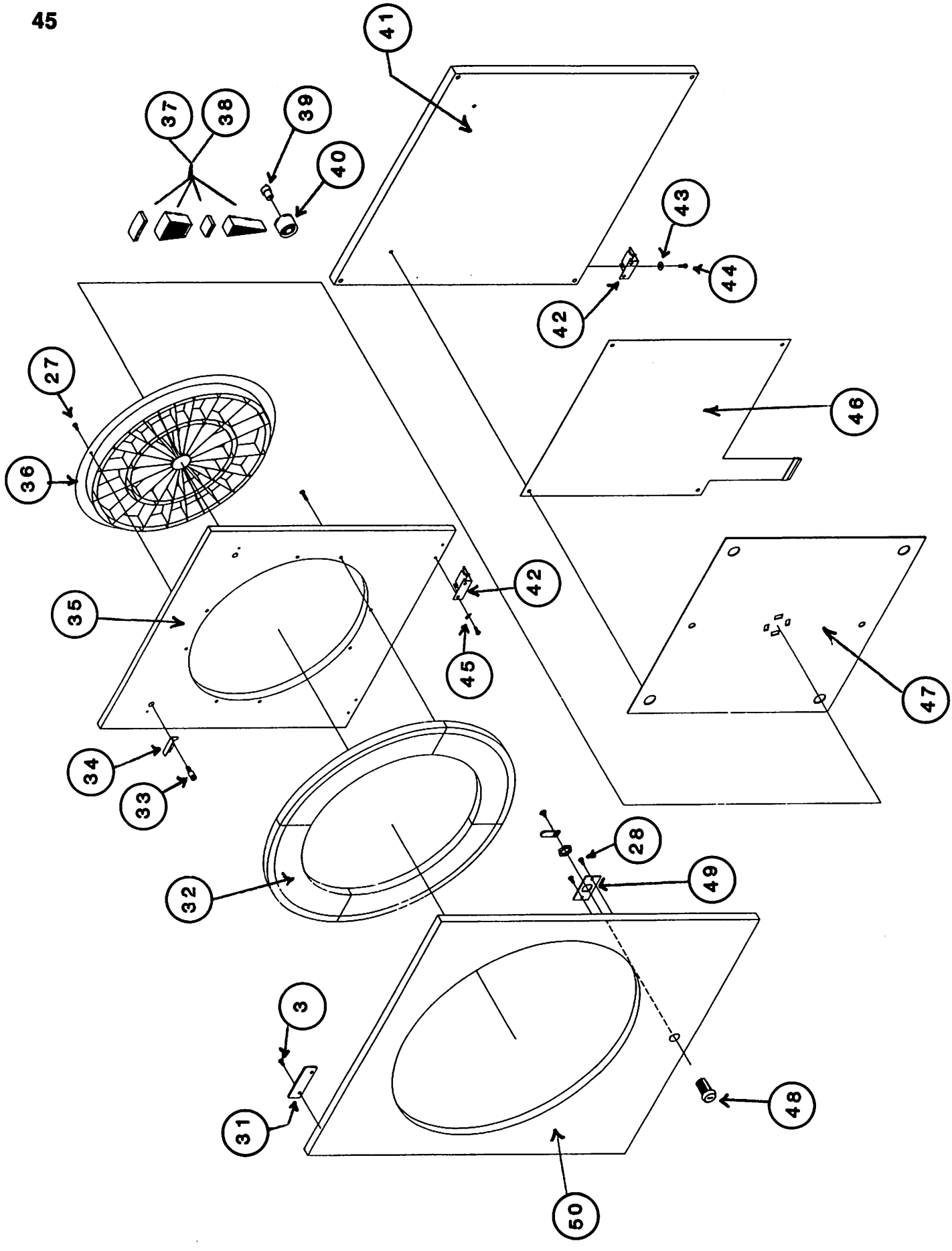
41
37
38
39
40
43
44
42
27
46
36
42
35
45
47
34
33
28
32
49
3
31
48
50

STATIONARY MATRIX TARGET ASSEMBLY PARTS LIST

31	206-0274	Dart Door Finger
32	205-1022	Segment, Dart Catching Ring, American
33	201-0111	Adjustment Screw 1/4-20x1-9/32" coated
34	206-0279	Latch, Matrix Switch
35	ADF-0-03-01	Cabinet Top American Spider DCR Mounting Board Assembly
	Q51	Target Assembly, T-R SM American (Kit N73)
36	205-1222	Spider, American, White, Thin-Ribbed
37	Q28	Segment Set, 4 Pieces, Thin-Ribbed, American, Red
38	Q29	Segment Set, 4 Pieces, Thin-Ribbed, American, Blue
39	205-1221	Inner Bullseye, Red
40	205-0340	Outer Bullseye, Blue, American
41	ADB-0-04-01	Cabinet Top Matrix Switch Mounting Board Assembly
42	206-0272	Hinge, SM Target
43	204-1003	Washer #10
44	201-1046	Machine Screw #8-32x1/2", Pan, Phillips, Zinc Plated
45	204-1017	Lock washer #8, Internal tooth
	Q52	Matrix Switch Assembly, T-R SM American (Kit N65)
46	227-0003	Matrix Switch, American, Thin-Ribbed
47	207-0048	Rubber Sheet, American, Thin-Ribbed
48	212-0023	Lock
49	206-0008	Anchor Plate
50	ADF-0-01-01	Cabinet Top Valley Dart Door Assembly

REPLACEMENT LAMP INFORMATION

LAMPS: Replace only with same type and rating.

WEDGE BASE
14V, 80 mA, Type 658
Valley Part#223-1006-0
(Game Switches)

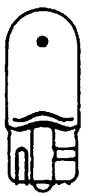

WEDGE BASE
14V, 270mA, T 3-1/4 Type194
Valley Part#223-0014-0
(Throw/Don't Throw)

BI-PIN
14V, 80 mA, Type 5810
Valley Part#223-0006-0
(Upper Display)

WEDGE BASE
28V, 60 mA, Type 656
Valley Part#223-1008-0
(Coin Door)

PUSH BUTTON SWITCHES PARTS LIST

51	Button Housing, 1" square	
	205-0224-1	"High Score" Legend
	205-0225-1	"Shanghai" Legend
	205-0639-0	"301/501/701/901" Legend
	205-0640-0	"CRICKET MARK 21™" Legend
	205-0641-0	"ERNIE" Legend
	205-0230-1	"Double In" Legend
	205-0241-1	"Double Out/Cut-Throat" Legend
	205-0232-1	"Masters Out" Legend
	205-0233-1	"League" Legend
52	Button Housing, 2" square	
	205-0242-0	"Player Change" Legend
53	227-0016-0	Microswitch, DPST
54	223-1006-0	Lamp, miniature, Wedge, 14V DC NOTE: For best operation, continue using a GE658 when replacing this lamp.
55	J35-0-00-00	Player Change Retainer Assembly
	207-0085-1	Die Cut Urethane Flexible locking Band
	206-0440-0	Wire Ring Hook Form

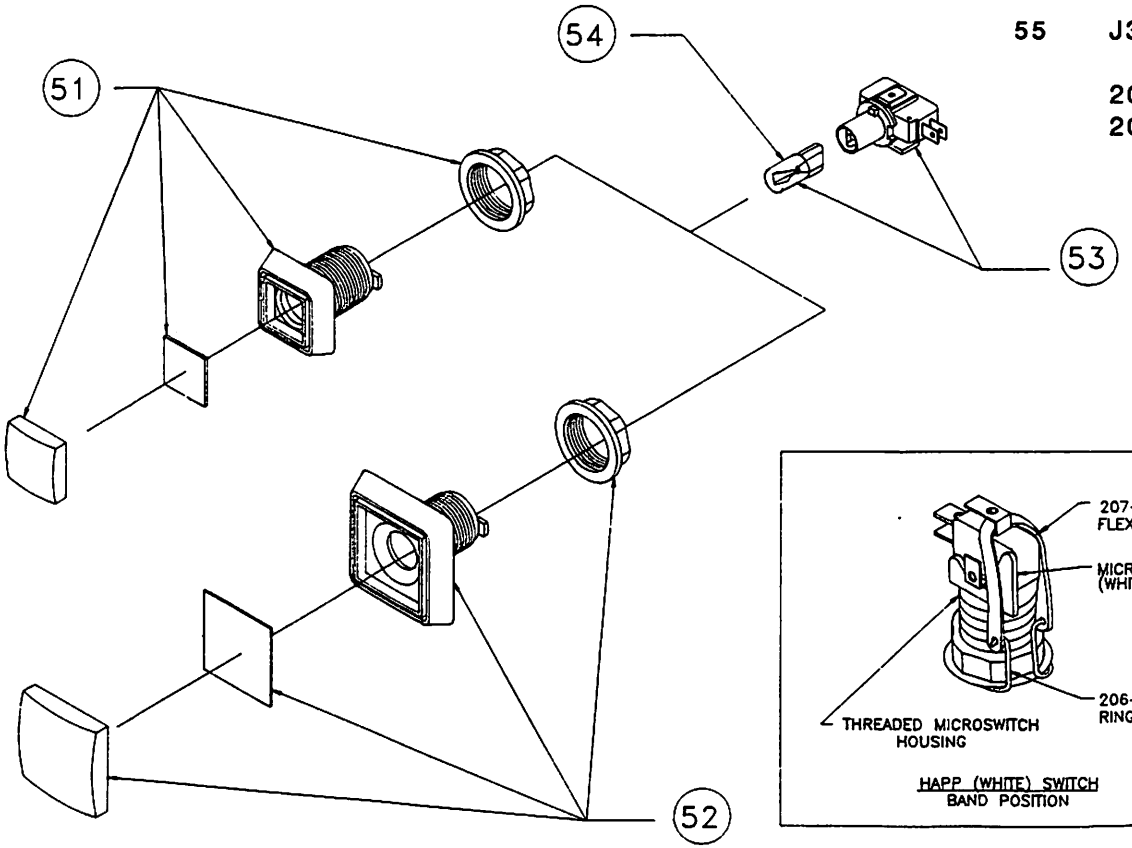

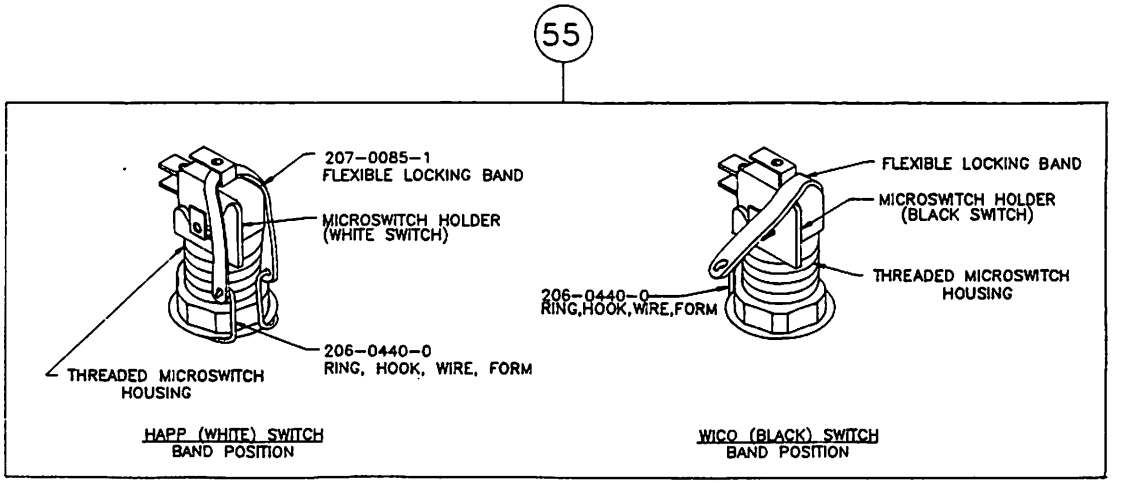

SYSTEM DIAGRAM

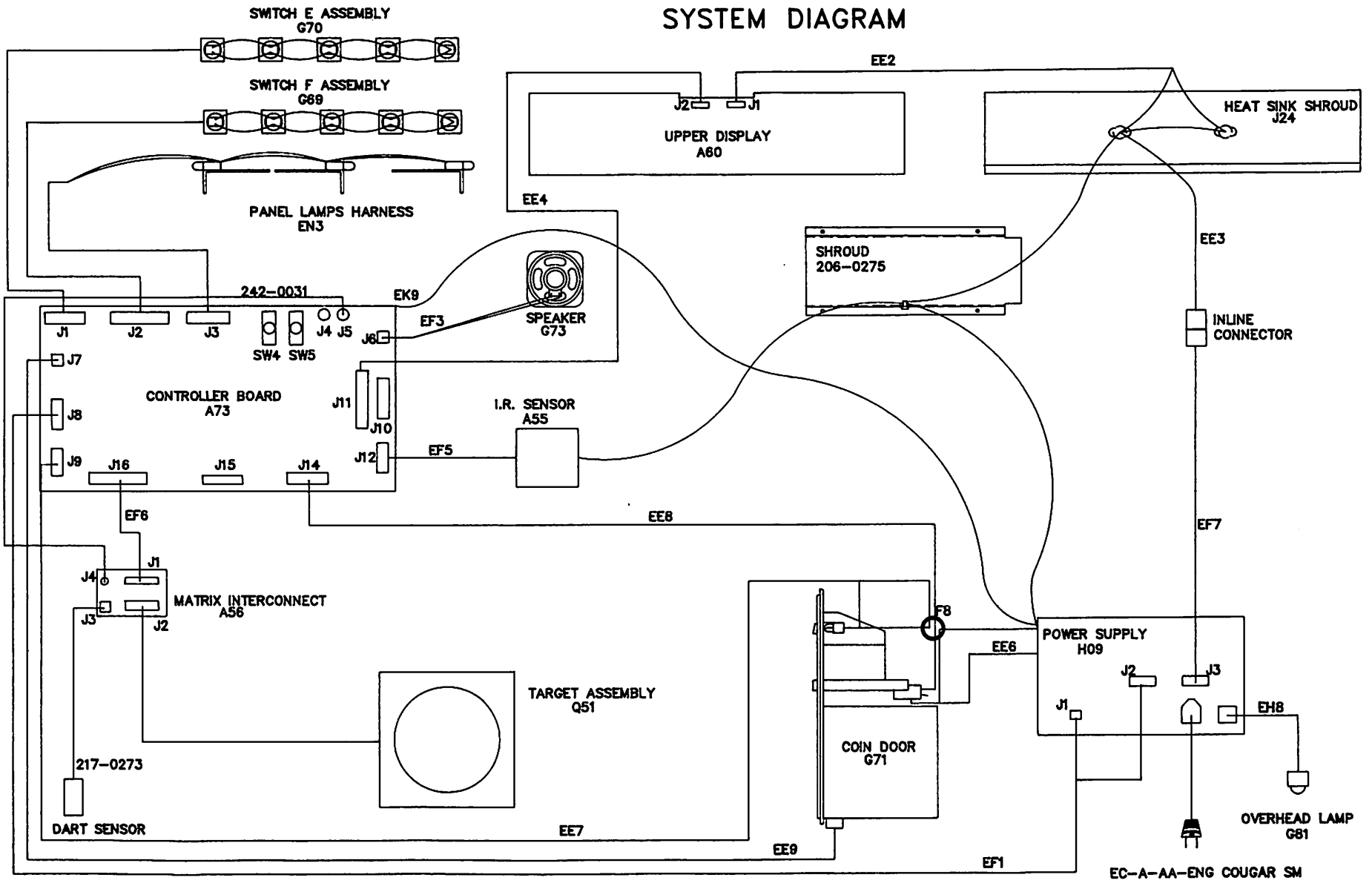

CABLES AND HARNESSES PARTS LIST

EE2	Harness, Output, Regulator Shroud
EE4	Cable Ribbon, Upper Display
EF1	Harness, Power, Controller Card
EF2	Cable, Light Fixture, Fluorescent
EF3	Harness, Speaker
EN3	Harness, Lamp Assembly
EF5	Cable Ribbon, Infrared
EF6	Cable Ribbon, Matrix Interconnect
EF7	Harness, Upper Display Power
EHI	Harness Coin Door Universal
	- EE6 Harness, Coin Door Ground
	- EE7 Harness, Coin Door Power
	- EE8 Harness, Coin Mechanism
	- EE9 Harness, Coin Meter
EK9	Controller Ground.
G69	5 Switch Assembly, F
G70	5 Switch Assembly, E
G71	Coin Door Assembly
	- M73 Cougar Darts & Tips Bag Assembly
	- M92 Stability Assurance Kit
242-0006	Line Cord
244-0008	F8 - Ferrite Bead

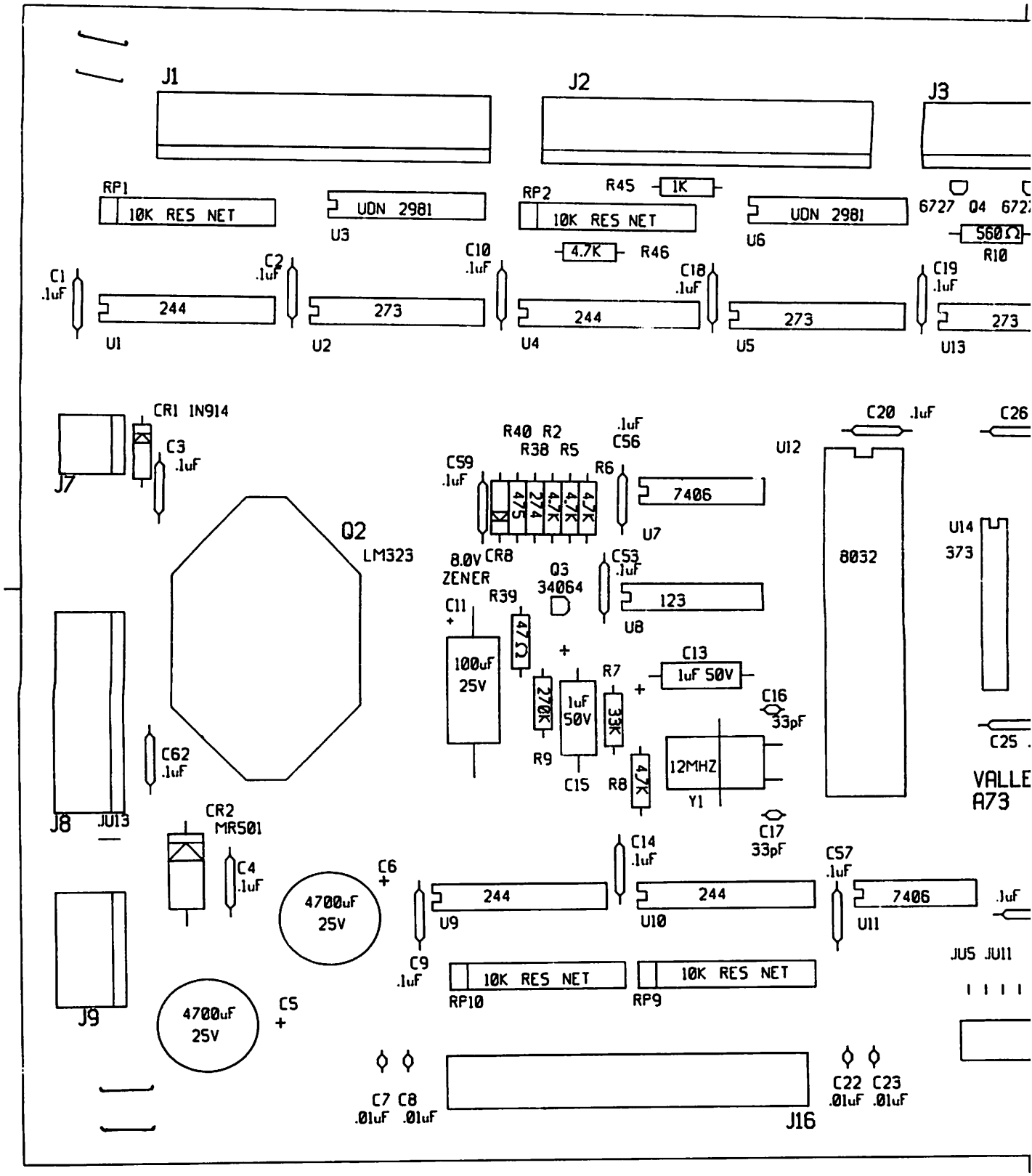
J1
J2
J3
RP1
10K RES NET
UDN 2981
U3
RP2
R45
1K
10K RES NET
UDN 2981
U6
6727 Q4 672
560Ω
R10
4.7K
R46
C1
.1uF
C2
.1uF
C10
.1uF
C18
.1uF
C19
.1uF
244
U1
273
U2
244
U4
273
U5
273
U13
CR1 1N914
C3
.1uF
J7
R40 R2
R38 R5
C56
.1uF
C59
.1uF
R6
7406
U7
U12
C20 .1uF
C26
Q2
LM323
8.0V
ZENER
CR8
Q3
34064
C53
.1uF
123
U8
8032
U14
373
C11
R39
47Ω
100uF
25V
270K
1uF
50V
R7
33K
C13
1uF 50V
C16
33pF
C25
C62
.1uF
R9
C15
R8
4.7K
12MHZ
Y1
C17
33pF
VALLE
A73
J8
JU13
CR2
MR501
C4
.1uF
C6
4700uF
25V
C14
.1uF
244
U9
244
U10
C57
.1uF
7406
U11
.1uF
JU5 JU11
C9
.1uF
10K RES NET
RP10
10K RES NET
RP9
J9
4700uF
25V
C5
C7 C8
.01uF .01uF
J16
C22 C23
.01uF .01uF

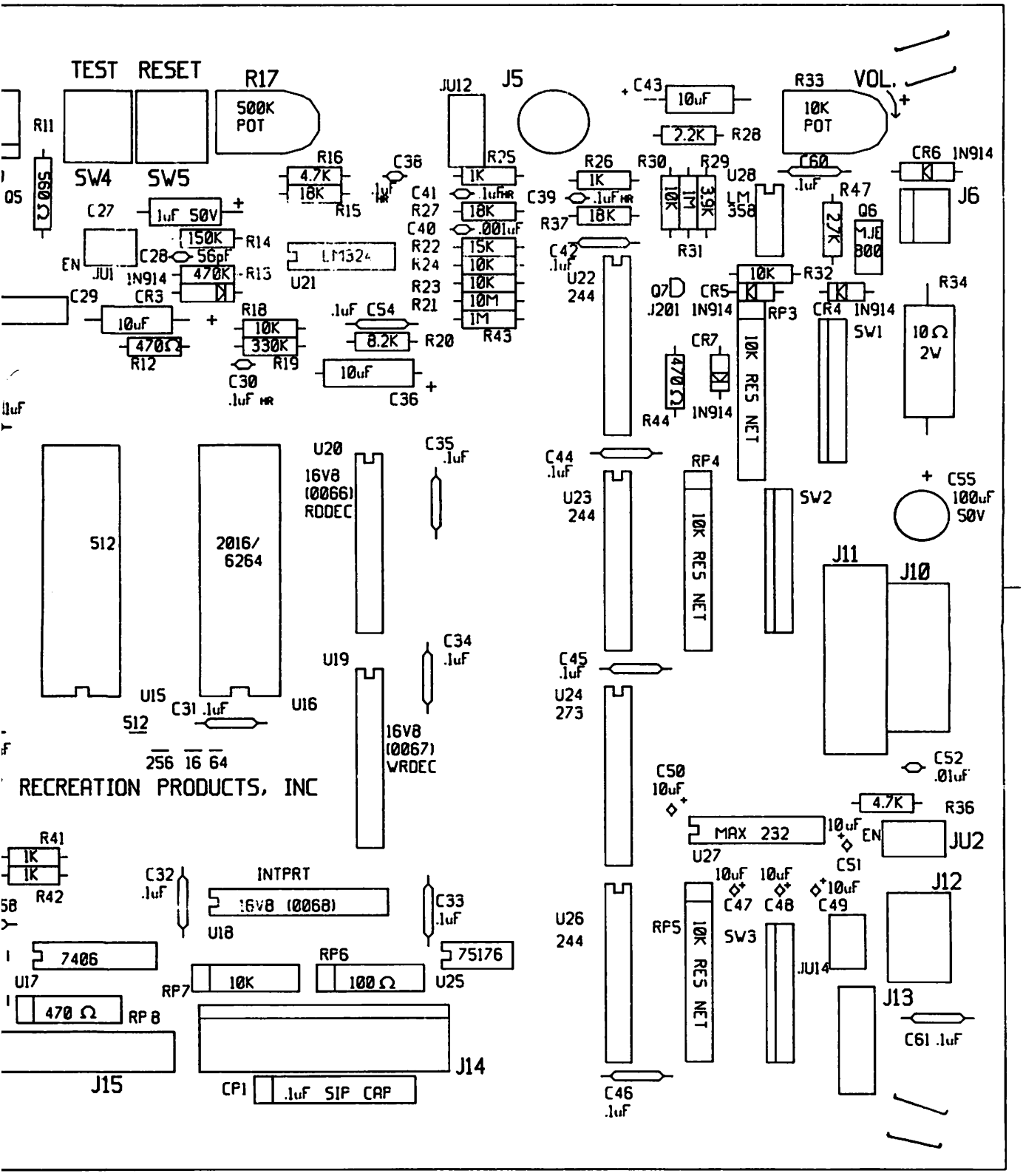

CONTROLLER CARD 2-SIDED
COMPONENT LAYOUT
A73-5-00-00

CONTROLLER CARD COMPONENT LAYOUT

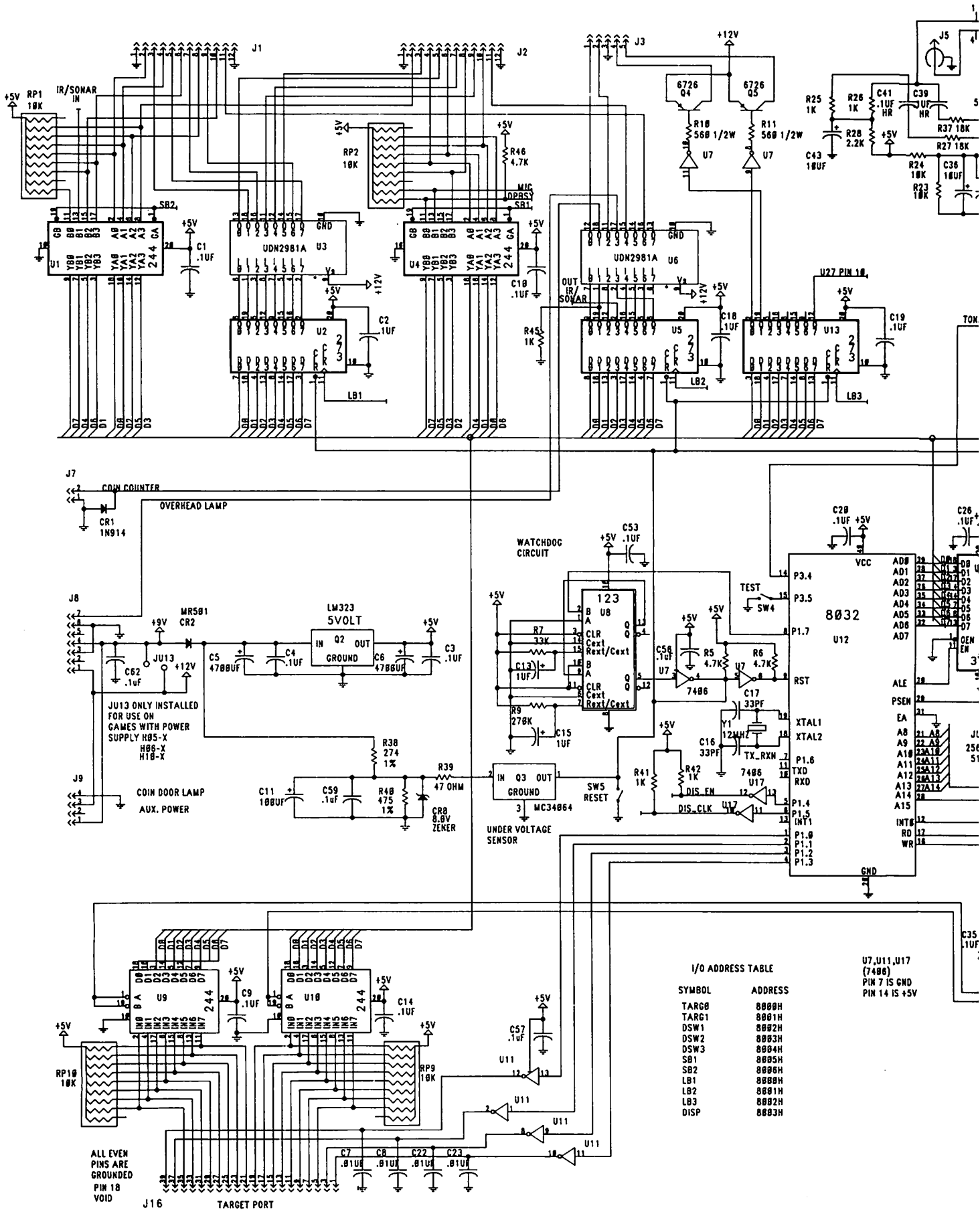
J1
J2
J3
J5
J7
J8
J9
J16
RP1 10K
IR/SONAR IN
RP2 10K
RP10 10K
RP9 10K
SB2
SB1
MIC
DPBSY
U1
U2
U3
U4
U5
U6
U7
U8
U9
U10
U11
U12
U13
U17
UDN2981A
244
273
6726 Q4
6726 Q5
R10 560 1/2W
R11 560 1/2W
R46 4.7K
R45 1K
R25 1K
R26 1K
R28 2.2K
R24 10K
R23 10K
R37 18K
R27 18K
C41 .1UF HR
C39 .1UF HR
C43 10UF
C36 10UF
C1 .1UF
C2 1UF
C10 .1UF
C18 .1UF
C19 .1UF
LB1
LB2
LB3
OUT IR/SONAR
U27 PIN 10
COIN COUNTER
CR1 1N914
OVERHEAD LAMP
MR501 CR2
LM323 5VOLT
IN Q2 OUT
GROUND
C5 4700UF
C4 .1UF
C6 4700UF
C3 .1UF
C62 .1uf
JU13
JU13 ONLY INSTALLED FOR USE ON GAMES WITH POWER SUPPLY H05-X H06-X H10-X
COIN DOOR LAMP
AUX. POWER
R38 274 1%
R39 47 OHM
C11 100UF
C59 .1uf
R40 475 1%
CR8 8.0V ZENER
IN Q3 OUT
GROUND
MC34064
UNDER VOLTAGE SENSOR
WATCHDOG CIRCUIT
C53 .1UF
123
R7 33K
C13 1UF
R9 270K
C15 1UF
C56 .1uf
R5 4.7K
R6 4.7K
7406
C17 33PF
Y1 12MHZ
C16 33PF
TX_RXN
R41 1K
R42 1K
DIS_EN
DIS_CLK
SW5 RESET
TEST
SW4
8032
P3.4
P3.5
P1.7
RST
XTAL1
XTAL2
P1.6
TXD
RXD
P1.4
P1.5
INT1
P1.0
P1.1
P1.2
P1.3
VCC
GND
AD0
AD1
AD2
AD3
AD4
AD5
AD6
AD7
ALE
PSEN
EA
A8
A9
A10
A11
A12
A13
A14
A15
INT0
RD
WR
C29 .1UF
C26 .1UF
C35 .1UF
C9 .1UF
C14 .1UF
C57 .1uf
C7 .01UF
C8 .01UF
C22 .01UF
C23 .01UF
ALL EVEN PINS ARE GROUNDED
PIN 18 VOID
TARGET PORT
I/O ADDRESS TABLE
SYMBOL ADDRESS
TARG0 8000H
TARG1 8001H
DSW1 8002H
DSW2 8003H
DSW3 8004H
SB1 8005H
SB2 8006H
LB1 8008H
LB2 8001H
LB3 8002H
DISP 8003H
U7,U11,U17 (7406) PIN 7 IS GND PIN 14 IS +5V

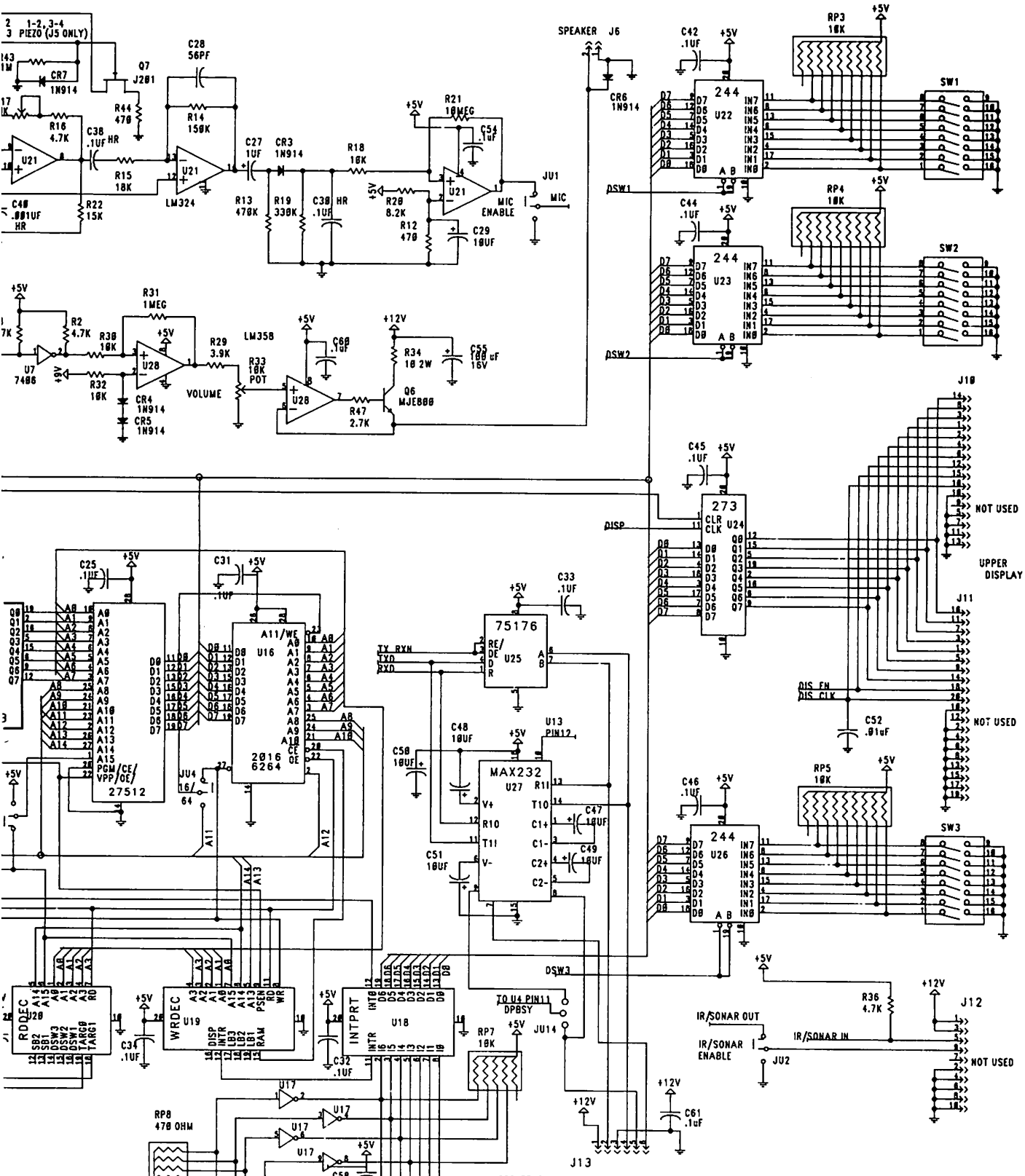

229-0046-1

MODIFICATIONS				
DATE	ECN	REV	CHKD	
10/6/92	E-1237	0	WJS	
2/16/93	E-1359	1	NO DWG	
2/17/93	E-1338	2	WJS	
6/3/93	E-1439	2	WJS	
9/8/93	E-1501	2		
1/3/94	E-1594	2		

5/16/94 ECN 1654 5

CONFIDENTIAL

THIS MATERIAL IS CONFIDENTIAL AND THE PROPRIETARY PROPERTY OF VALLEY RECREATION PRODUCTS, INC., ELECTRONIC DIVISION, AND SHOULD NOT BE USED OR DISCLOSED WITHOUT PRIOR WRITTEN AUTHORIZATION.

DATE: 7/14/92

DRAWN BY: BA

APPROVED BY: WJS

CONTROLLER, 2-SIDED SM GAME

VALLEY RECREATION PRODUCTS, INC.
ELECTRONIC DIVISION
328 NORTH AVENUE, SYCAMORE, IL 60178
(815) 895-6168/FAX (815) 895-2118

DRAWING NO.
A73-5-00-00

CONTROLLER CARD

UPPER DISPLAY COMPONENT LAYOUT

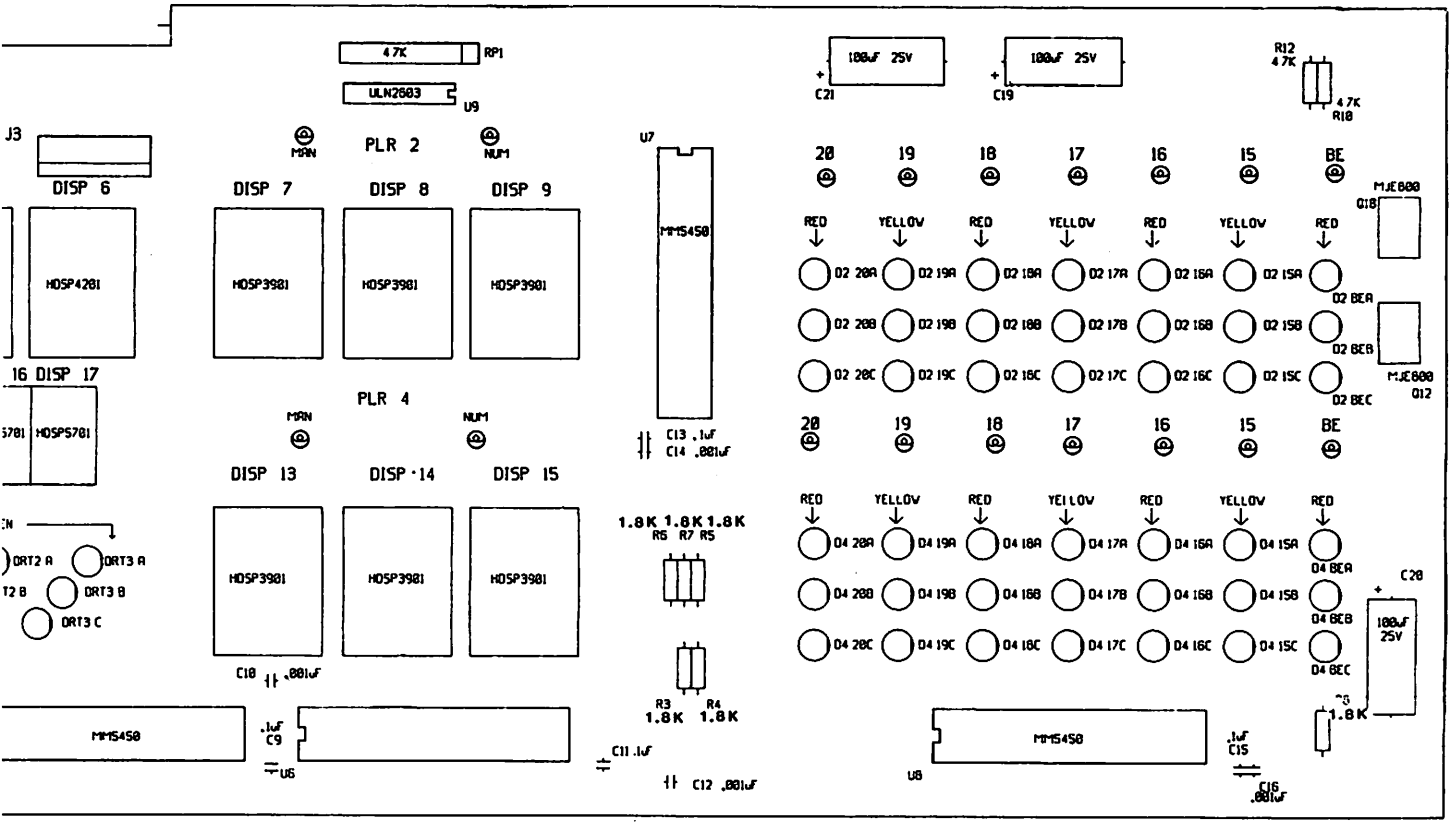
47K
RP1
ULN2803
U9
J3
MAN
PLR 2
NUM
U7
DISP 6
DISP 7
DISP 8
DISP 9
HDSP4201
HDSP3981
HDSP3981
HDSP3981
MM5450
16 DISP 17
HDSP5701
PLR 4
MAN
NUM
C13 .1uF
C14 .001uF
DISP 13
DISP 14
DISP 15
DRT2 A
DRT3 A
DRT3 B
DRT3 C
HDSP3981
HDSP3981
HDSP3981
1.8K 1.8K 1.8K
R6 R7 R5
C10 .001uF
R3 R4
1.8K 1.8K
MM5450
.1uF
C9
U6
C11 .1uF
C12 .001uF
100uF 25V
C21
100uF 25V
C19
R12
4.7K
4.7K
R10
20 19 18 17 16 15 BE
MJE800
Q18
RED YELLOW RED YELLOW RED YELLOW RED
D2 20A D2 19A D2 18A D2 17A D2 16A D2 15A
D2 BEA
D2 20B D2 19B D2 18B D2 17B D2 16B D2 15B
D2 BEB
MJE800
Q12
D2 20C D2 19C D2 18C D2 17C D2 16C D2 15C
D2 BEC
20 19 18 17 16 15 BE
RED YELLOW RED YELLOW RED YELLOW RED
D4 20A D4 19A D4 18A D4 17A D4 16A D4 15A
D4 BEA
C20
D4 20B D4 19B D4 18B D4 17B D4 16B D4 15B
D4 BEB
100uF 25V
D4 20C D4 19C D4 18C D4 17C D4 16C D4 15C
D4 BEC
1.8K
MM5450
U8
.1uF
C15
C16 .001uF

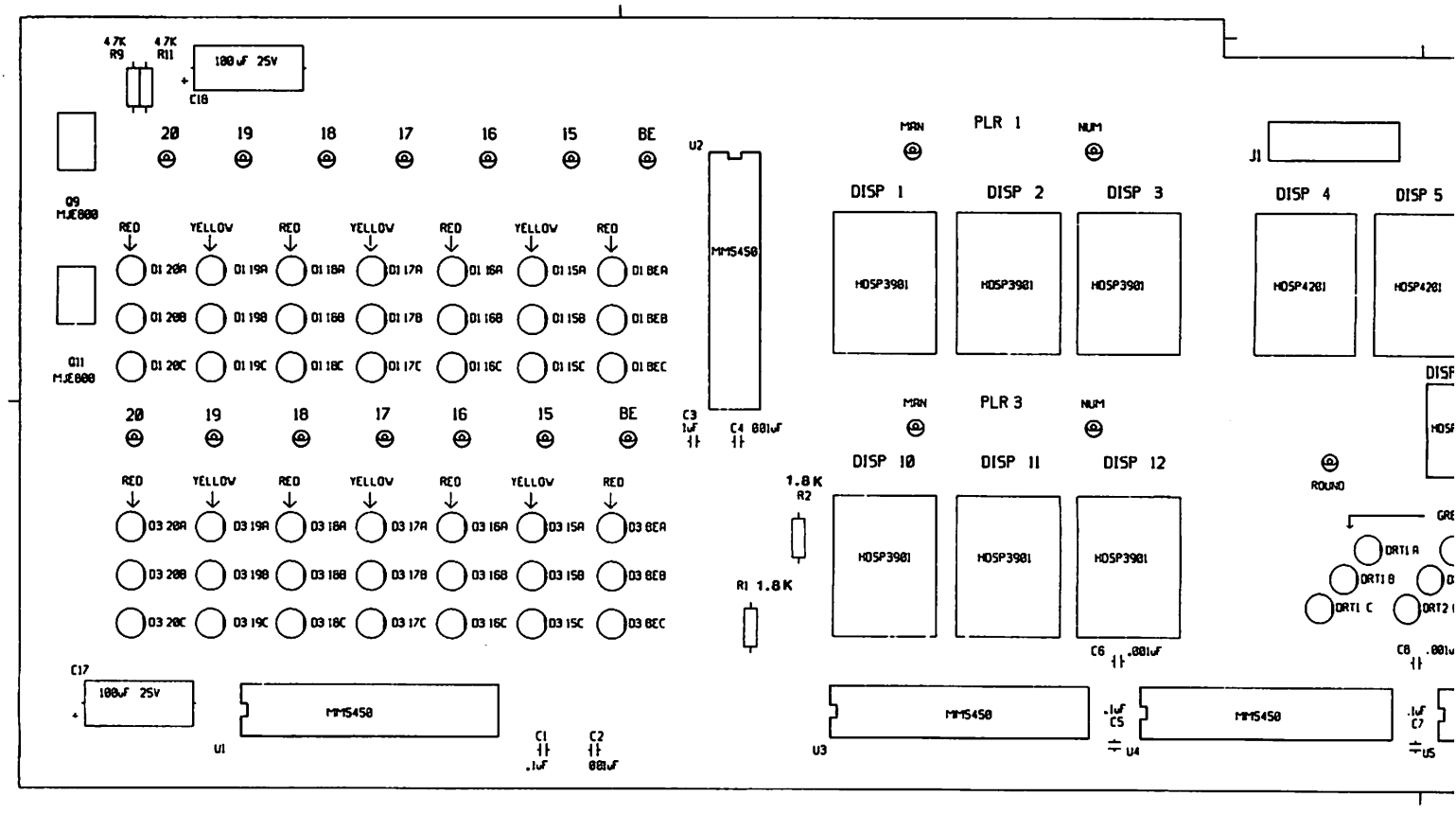
4.7K R9
4.7K R11
100uF 25V
C10
20 19 18 17 16 15 BE
Q9 MJE800
Q11 MJE800
RED YELLOW RED YELLOW RED YELLOW RED
D1 20A D1 19A D1 18A D1 17A D1 16A D1 15A D1 BEA
D1 20B D1 19B D1 18B D1 17B D1 16B D1 15B D1 BEB
D1 20C D1 19C D1 18C D1 17C D1 16C D1 15C D1 BEC
20 19 18 17 16 15 BE
RED YELLOW RED YELLOW RED YELLOW RED
D3 20A D3 19A D3 18A D3 17A D3 16A D3 15A D3 BEA
D3 20B D3 19B D3 18B D3 17B D3 16B D3 15B D3 BEB
D3 20C D3 19C D3 18C D3 17C D3 16C D3 15C D3 BEC
C17
100uF 25V
MM5450
U1
C1 .1uF
C2 .001uF
U2
MM5450
C3 1uF
C4 .001uF
1.8K R2
R1 1.8K
MAN
PLR 1
NUM
DISP 1
DISP 2
DISP 3
HDSP3901
HDSP3901
HDSP3901
MAN
PLR 3
NUM
DISP 10
DISP 11
DISP 12
HDSP3901
HDSP3901
HDSP3901
C6 .001uF
MM5450
U3
.1uF C5
MM5450
U4
J1
DISP 4
DISP 5
HDSP4201
HDSP4201
ROUND
ORT1 A
ORT1 B
ORT1 C
C8 .001uF
.1uF C7
U5

UPPER DISPLAY

A60-0-00-00

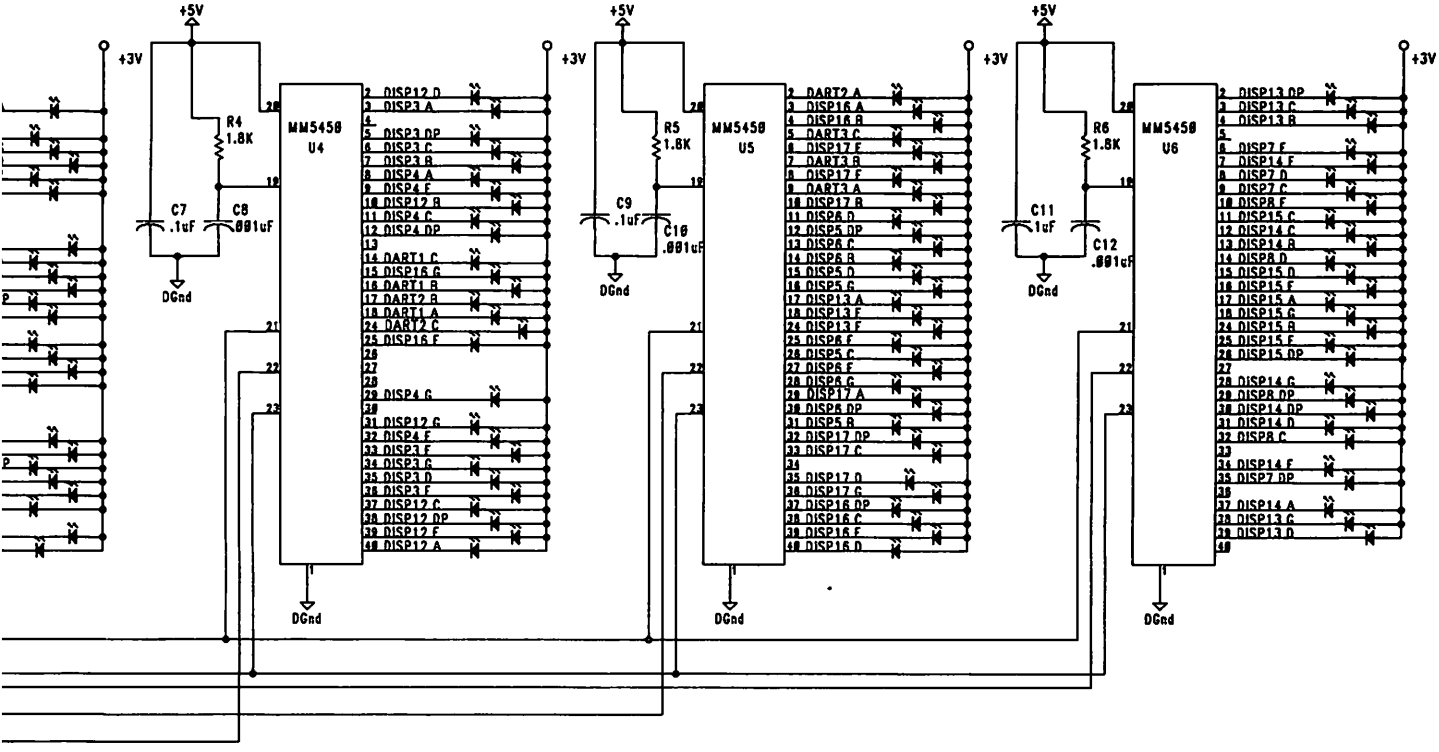

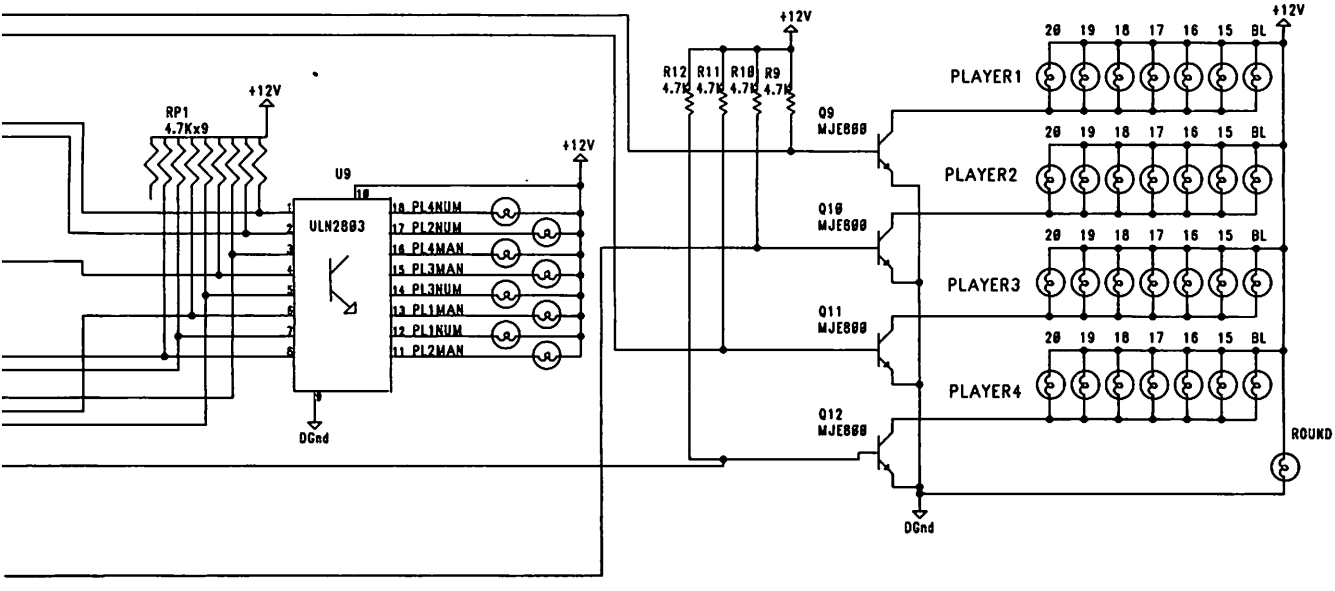

229-0040-1

MODIFICATIONS				CONFIDENTIAL	DATE: 7 - 26 - 90
DATE	ECN	REV	CHKD	THIS MATERIAL IS CONFIDENTIAL AND THE PROPRIETARY PROPERTY OF VALLEY RECREATION PRODUCTS, INC., ELECTRONIC DIVISION, AND SHOULD NOT BE USED OR DISCLOSED WITHOUT PRIOR WRITTEN AUTHORIZATION.	DRAWN BY: WJS
12/11/92	E-1305	0	BC		APPROVED BY: BA
				UPPER DISPLAY w/ CRICKET	
				VALLEY RECREATION PRODUCTS, INC. ELECTRONIC DIVISION 329 NORTH AVENUE, SYCAMORE, IL 60178 (815) 895-8186/FAX (815) 895-2118	DRAWING NO. A60-0-00-00

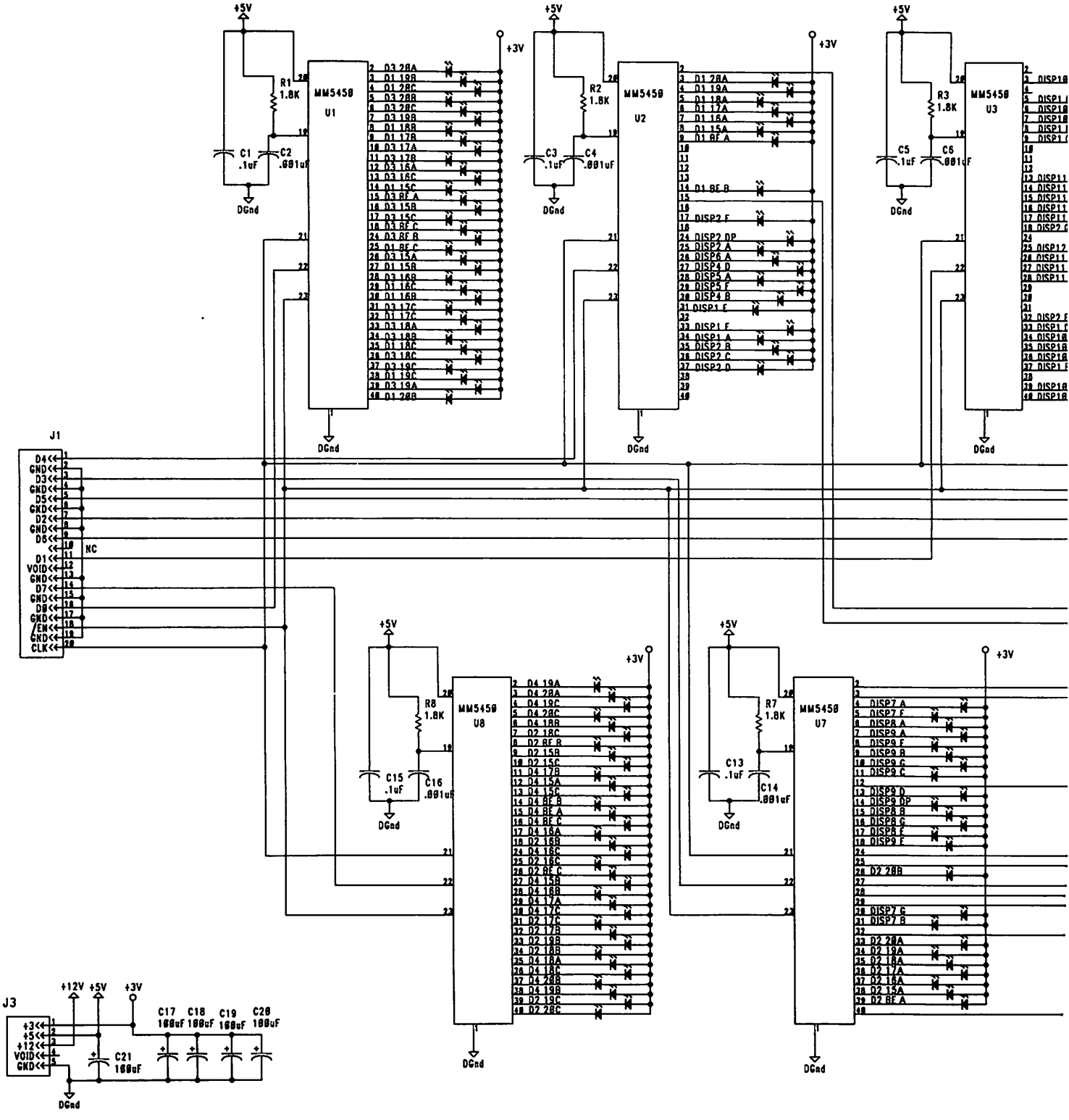
+5V
+3V
R1 1.8K
C1 .1uF
C2 .001uF
DGnd
MM5450 U1
R2 1.8K
C3 .1uF
C4 .001uF
MM5450 U2
R3 1.8K
C5 .1uF
C6 .001uF
MM5450 U3
J1
D4
GND
D3
D5
D2
D6
NC
D1
VOID
D7
D0
/EN
CLK
R8 1.8K
C15 .1uF
C16 .001uF
MM5450 U8
R7 1.8K
C13 .1uF
C14 .001uF
MM5450 U7
J3
+12V
+3
+5
+12
VOID
GND
C17 100uF
C18 100uF
C19 100uF
C20 100uF
C21 100uF

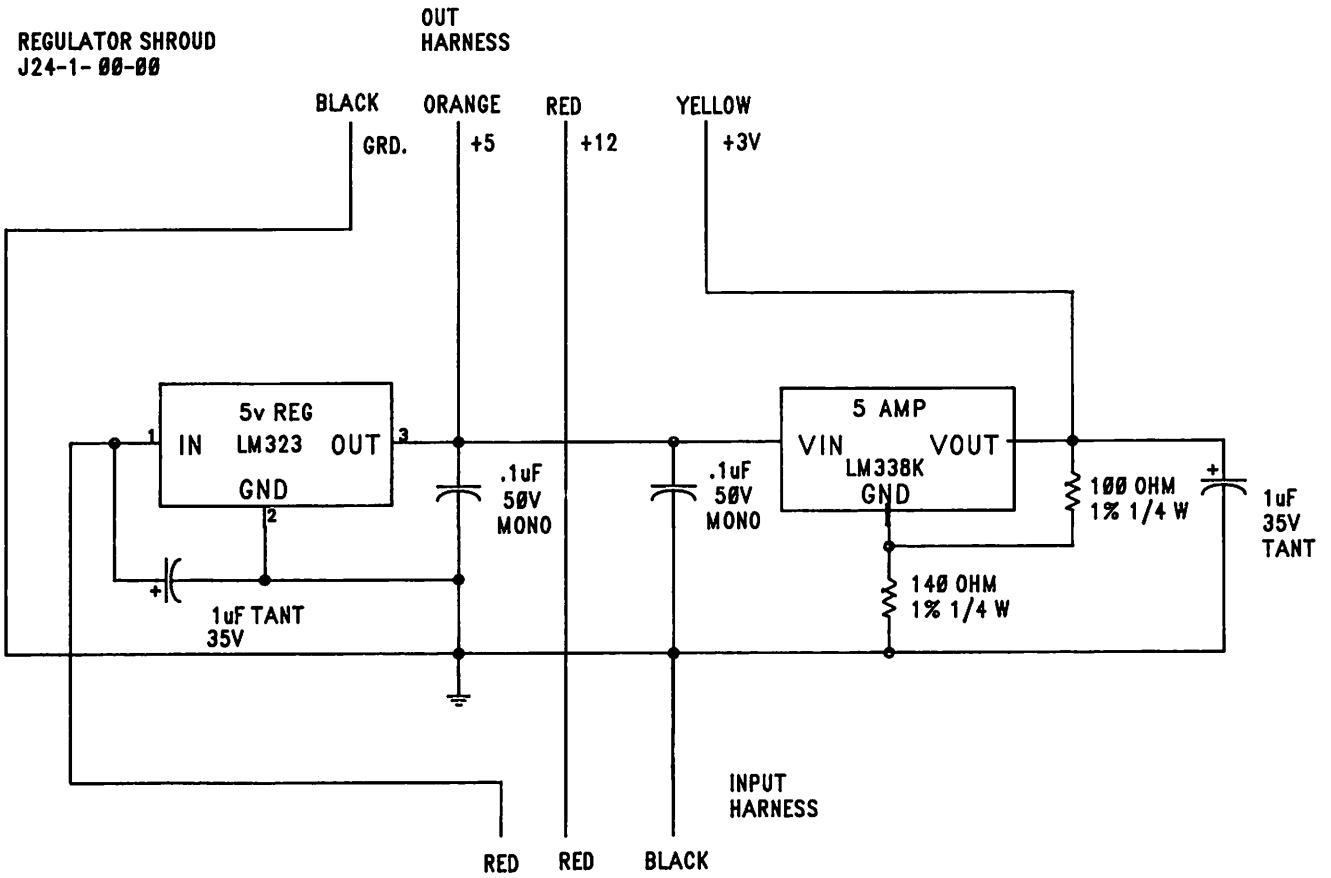

REGULATOR SHROUD

J24-1-00-00

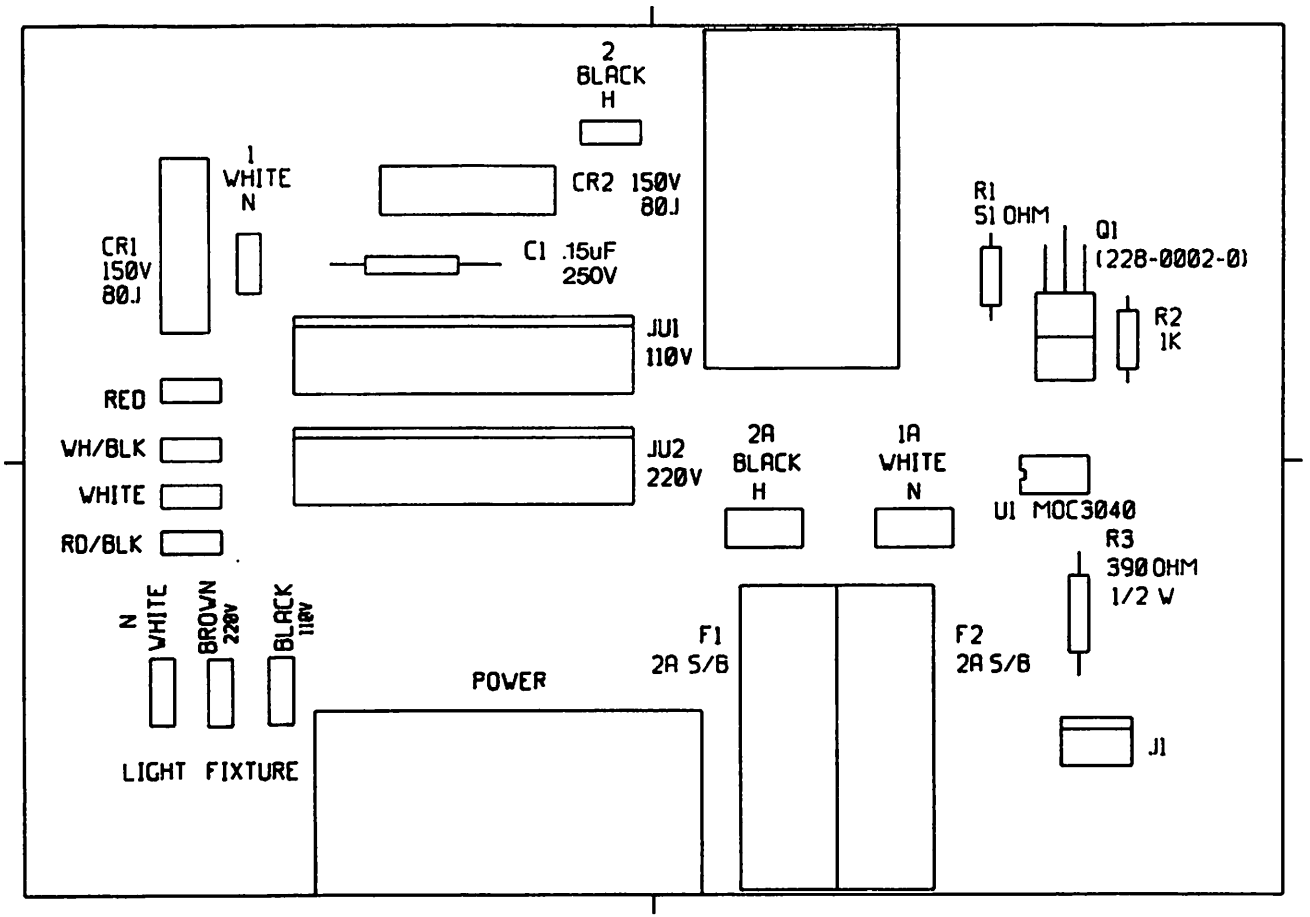

POWER SUPPLY, HIGH VOLTAGE

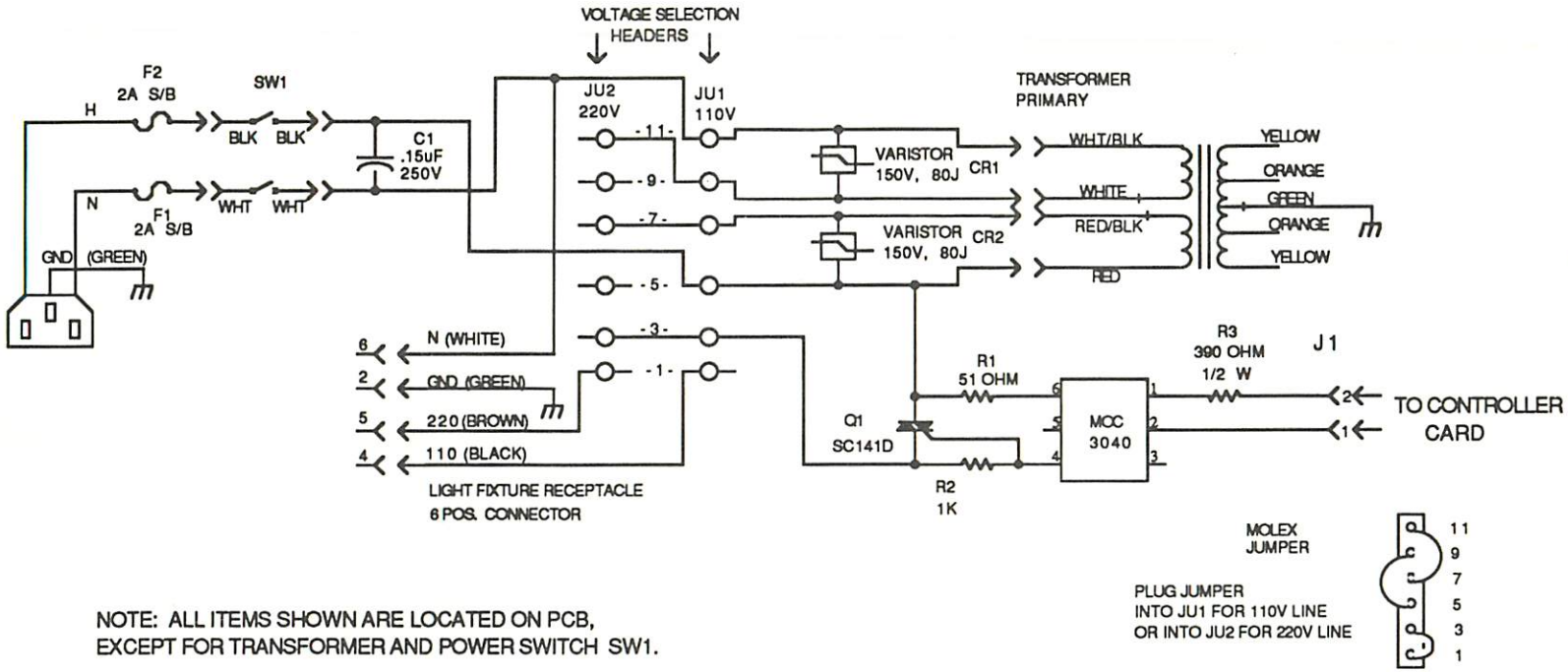

NOTE: ALL ITEMS SHOWN ARE LOCATED ON PCB,
EXCEPT FOR TRANSFORMER AND POWER SWITCH SW1.

229-0042-0

MODIFICATIONS				CONFIDENTIAL	DATE: 6/25/91
DATE	ECN	REV	CHKD	THIS MATERIAL IS CONFIDENTIAL AND THE PROPRIETARY PROPERTY OF VALLEY RECREATION PRODUCTS, INC., ELECTRONIC DIVISION, AND SHOULD NOT BE USED OR DISCLOSED WITHOUT PRIOR WRITTEN AUTHORIZATION.	DRAWN BY: LSS
10/23/92	E-1249	0	WJS		APPROVED BY: EM
2/16/94	E-1611	1		HIGH VOLTAGE PCB ASSY.	
				VALLEY RECREATION PRODUCTS, INC. ELECTRONIC DIVISION 320 NORTH AVENUE, SYCAMORE, IL 60178 (815) 895-8188/ FAX (815) 895-2118	DRAWING NO. A57-1-00-00

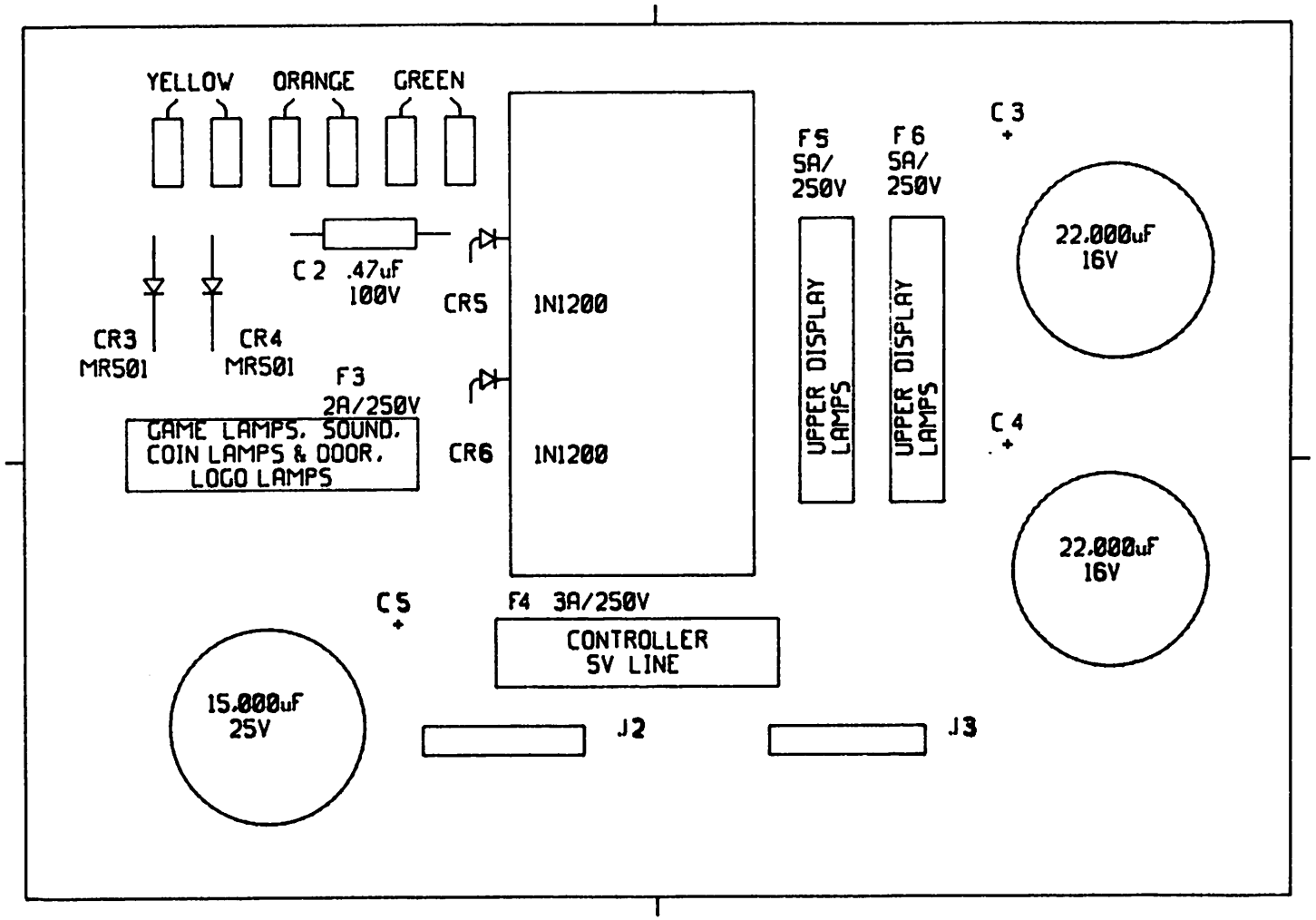

POWER SUPPLY, LOW VOLTAGE

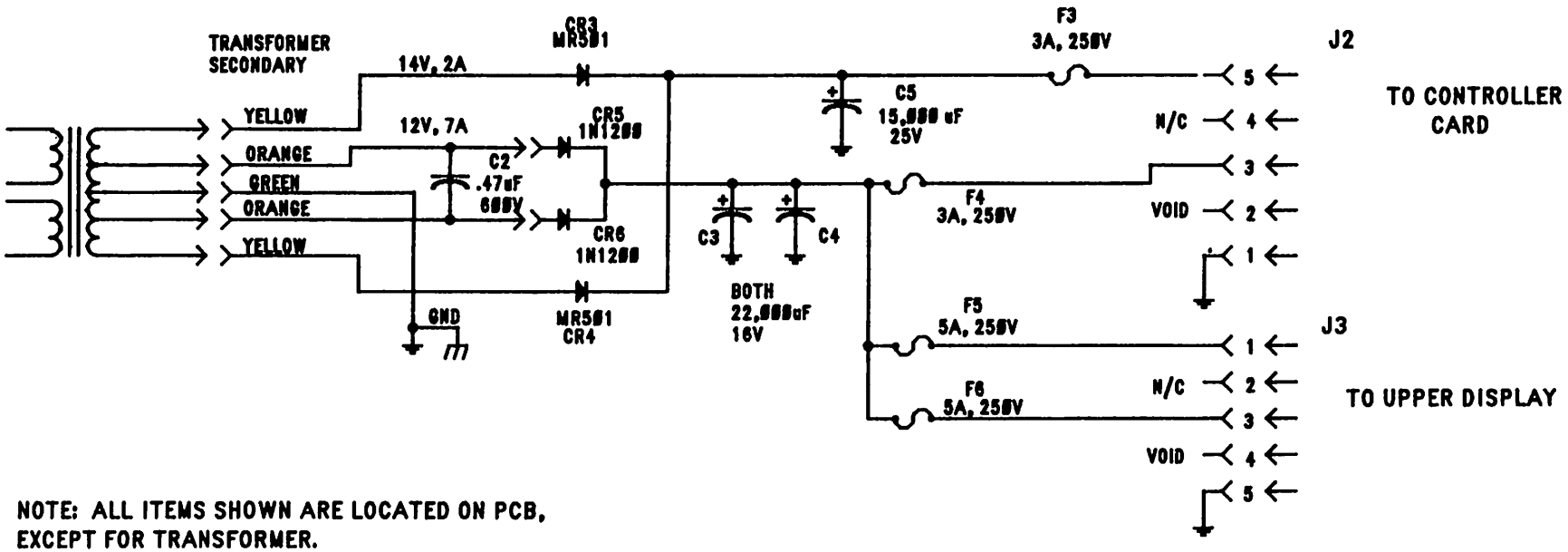

NOTE: ALL ITEMS SHOWN ARE LOCATED ON PCB,
EXCEPT FOR TRANSFORMER.

POWER SUPPLY, LOW VOLTAGE

A58-1-00-00

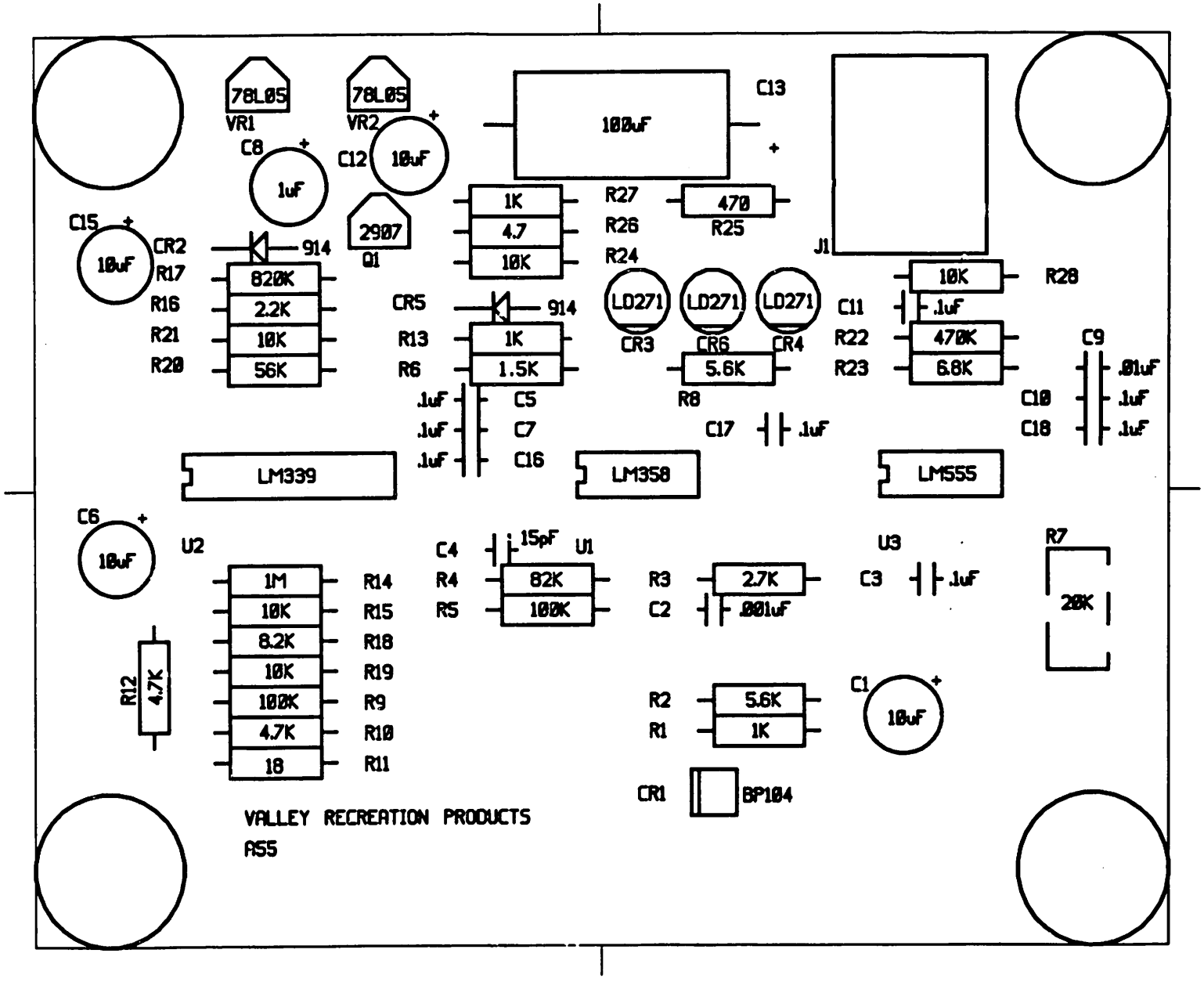

INFRARED SENSOR COMPONENT LAYOUT

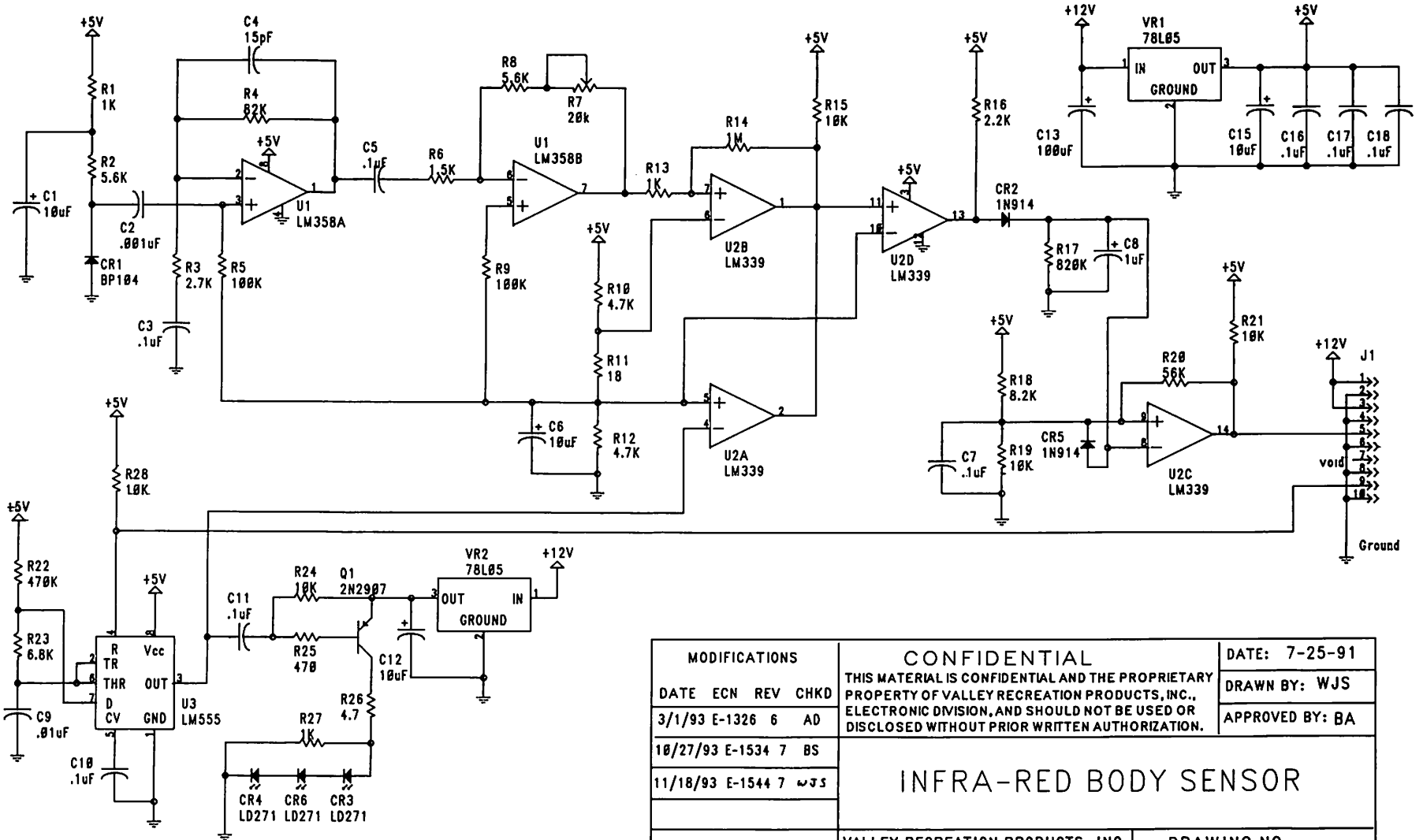

MODIFICATIONS				CONFIDENTIAL	DATE: 7-25-91
DATE	ECN	REV	CHKD	THIS MATERIAL IS CONFIDENTIAL AND THE PROPRIETARY PROPERTY OF VALLEY RECREATION PRODUCTS, INC., ELECTRONIC DIVISION, AND SHOULD NOT BE USED OR DISCLOSED WITHOUT PRIOR WRITTEN AUTHORIZATION.	DRAWN BY: WJS
3/1/93	E-1326	6	AD		APPROVED BY: BA
10/27/93	E-1534	7	BS	INFRA-RED BODY SENSOR	
11/18/93	E-1544	7	WJS		
				VALLEY RECREATION PRODUCTS, INC. ELECTRONIC DIVISION 328 NORTH AVENUE, SYCAMORE, IL 60178 (815) 895-6188/ FAX (815) 895-2118	DRAWING NO. A55-7-00-00

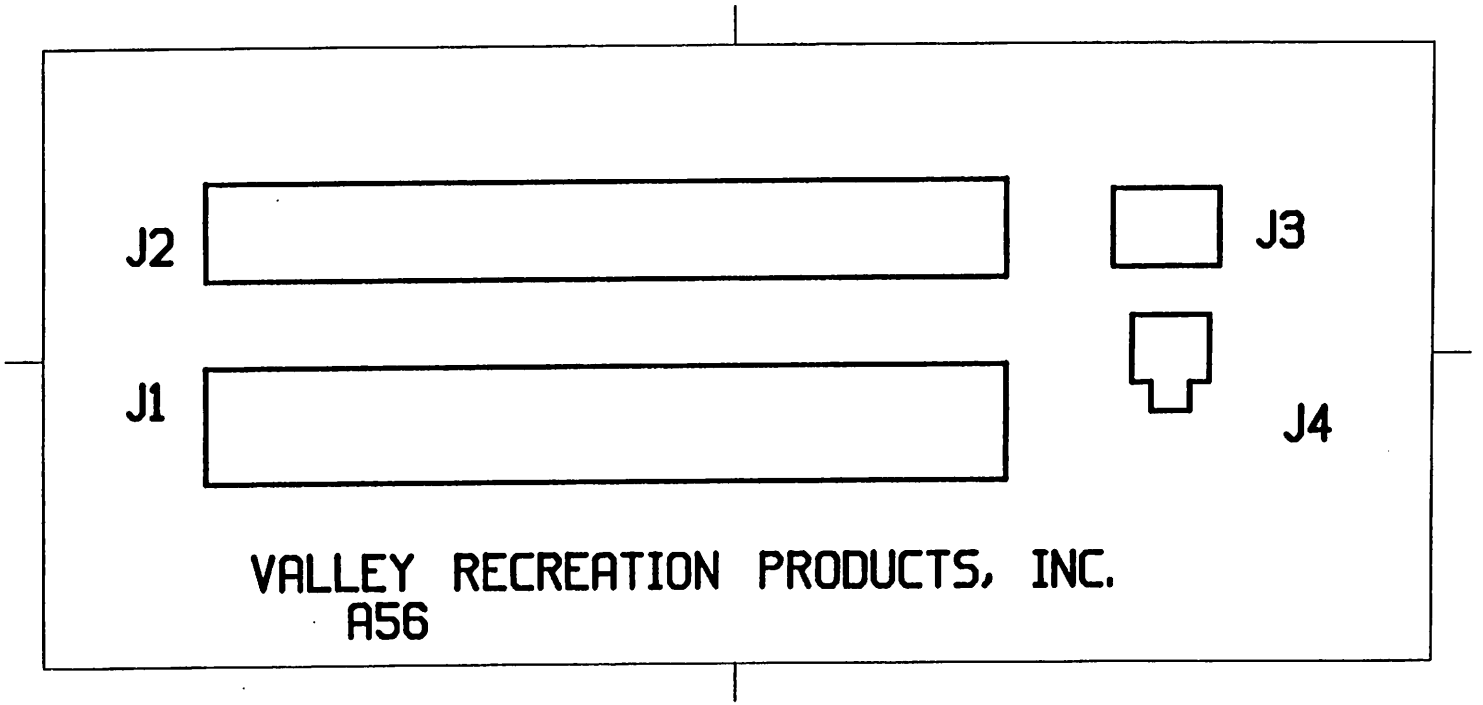

MATRIX INTERCONNECT

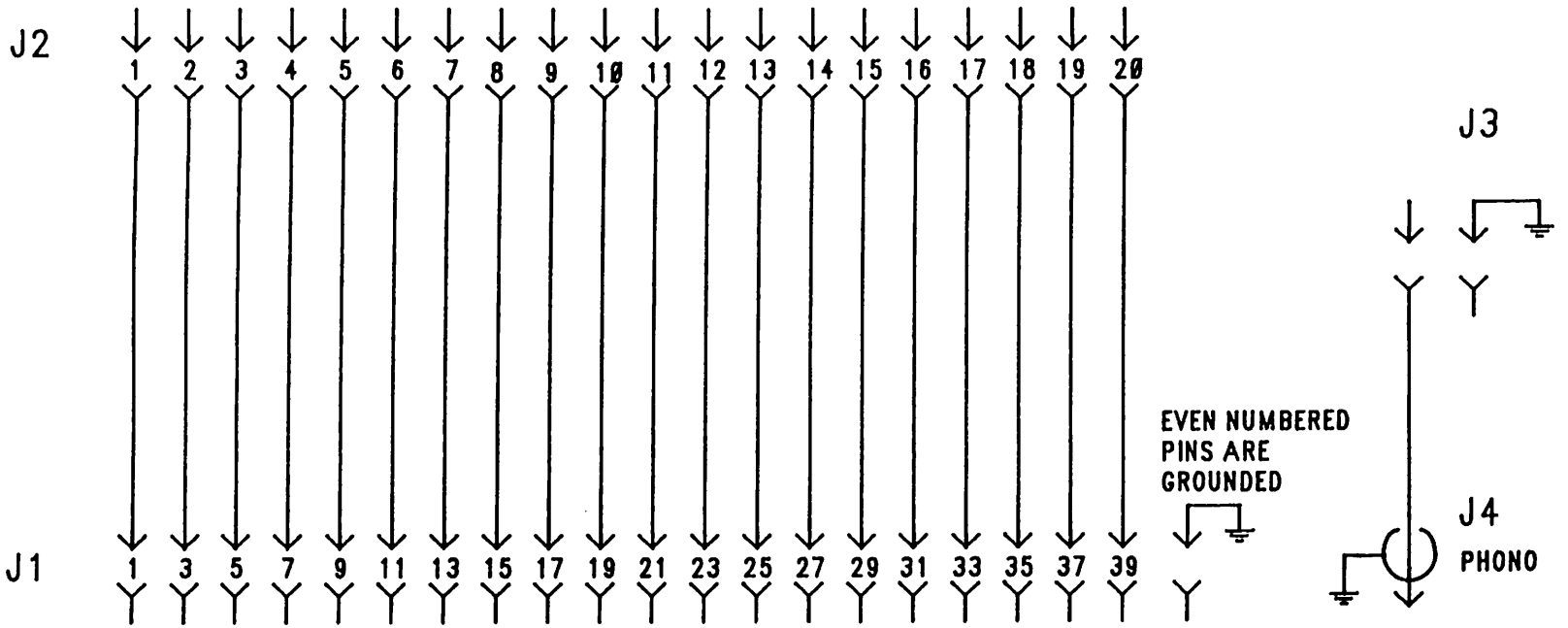

MATRIX INTERCONNECT

A56-0-00-00